Oikos Wi-Fi Grigio

VE796100

Smart thermostats / Climate Control



230 Vac smart thermostat with Wi-Fi, weekly programming, for 2-module flush-mounted installation. Device designed for room temperature regulation in heating mode (winter) and cooling mode (summer). Thanks to the Wi-Fi connection, the device can be remotely controlled in all its functions, using the free app available for iOS and Android. Setup is easy using the phone's Bluetooth connection. Programming, switching on the system, changing the operating settings and creating new programmes are operations that can be all performed easily and from anywhere thanks to the integrated Wi-Fi module that connects the device to the internet through the home router.

General features

- For installation on 2-module flush-mounted boxes with 45 mm high
- Terminal block on the back of the device for connecting load and power supply
- LED for system status indication
- “T” configuration/programming key
- Integrated Bluetooth (BLE 5.0) and Wi-Fi module (compatible with 802.11 b/g/n standards)
- Full programming and management via application
- Application for iOS and Android systems
- Compatible with Google Home and Amazon Alexa
- Automatic weekly programming with 3 temperature levels: T1, T2, T3
- Temperature control: on/off (with adjustable differential) or proportional
- Temperature compensation of +/-5 °C via settable parameter
- Automatic summer/sunshine time change and automatic synchronisation of date and time when connected to Wi-Fi network
- Anti-freeze temperature to prevent system freezing when the device is in OFF state
- Emergency control: manual operation and setpoint adjustment via Bluetooth in case of Wi-Fi failure
- Alarm warning (e-mail) if the detected temperature exceeds the set minimum or maximum value
- Classification according to point 6 of European Commission Communication 2014/C 207/02: class IV
- Adapters included to adapt the instrument to the cover frames of the major residential series

Technical specifications

Power supply	
Power supply	230 Vac (-15% ÷ +10%)
Frequency	50 / 60 Hz
Temperature settings	
Settable temperatures	3 + antifreeze + manual
Temperature setting range Manual	2 ÷ 50 °C
Temperature setting range Automatic	2 ÷ 50 °C
Temperature setting range Antifreeze (Off)	OFF, 1 ÷ 50 °C
Measured temperature compensation range	- 5 ÷ 5 °C
Parameter settings	
Type of adjustment	ON-OFF or proportional
Differential/Hysteresis	0.1 ÷ 1 °C

Vemer S.p.A. declines all responsibility for the use of the products for purposes other than those for which they are intended, as indicated in the technical documentation. Vemer S.p.A. reserves the right to make, without prior notice, such changes as may, in its sole discretion, improve the technical and functional characteristics of the products and the related production logic. The technical characteristics and images of the products indicated are given for information only and are not binding in any way, since they may be modified without prior notice.

Revision date: 2026-02-02

Parameter settings	
Modes of operation	Summer Winter Off
Programming	Weekly
Programming resolution	1 hour
Measure	
Temperature measuring range	0 ÷ 50 °C
Temperature display resolution	0.1 °C
Temperature measurement accuracy	0.5 °C
Functions	
Timing function	✓
Delay function	✓
Measured temperature compensation function	✓
Manageable by application	✓
Manageable by virtual assistant	✓
Connectivity	
Transmission frequency	2,4 GHz (Wi-Fi) 2400 - 2483,5 MHz (Bluetooth)
Maximum transmitted radio frequency power	18,3 dBm (Wi-Fi) 20 dBm (Bluetooth)
Operating conditions	
Operating temperature range	0 ÷ 50 °C
Relative humidity	20% ÷ 90% non-condensing RH
Storage temperature range	-25 ÷ 70 °C
Approvals and certifications	
Classification according to point 6 of Communication 2014/C 207/02 of the European Commission:	Class IV
Viewing	
Display	No display
Outputs	
Relay number	1
Relay type	Normally open
Relay capacity at 250 Vac	5 A
Terminations	
Maximum cable cross-section	1.5 mm²
Mechanical features	
Protection degree	IP40

Vemer S.p.A. declines all responsibility for the use of the products for purposes other than those for which they are intended, as indicated in the technical documentation. Vemer S.p.A. reserves the right to make, without prior notice, such changes as may, in its sole discretion, improve the technical and functional characteristics of the products and the related production logic. The technical characteristics and images of the products indicated are given for information only and are not binding in any way, since they may be modified without prior notice.

Oikos Wi-Fi Grigio

VE796100

Physical features	
Color	Anthracite grey
Overall dimensions	
Height (A)	40 mm
Width (B)	40 mm
Depth (C)	42 mm

Dimensions

Front View

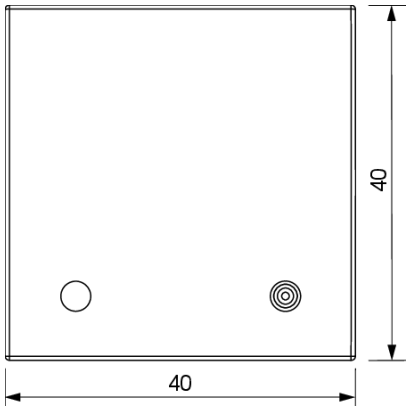

Side View

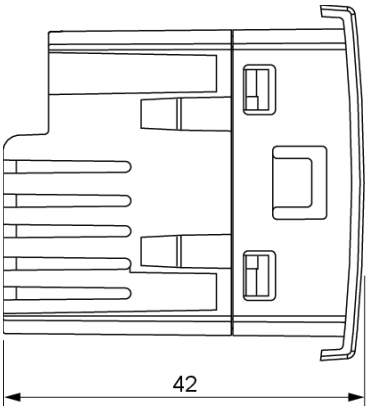

Wiring diagram

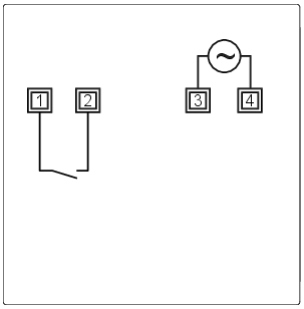

Vemer S.p.A. declines all responsibility for the use of the products for purposes other than those for which they are intended, as indicated in the technical documentation. Vemer S.p.A. reserves the right to make, without prior notice, such changes as may, in its sole discretion, improve the technical and functional characteristics of the products and the related production logic. The technical characteristics and images of the products indicated are given for information only and are not binding in any way, since they may be modified without prior notice.

Oikos Wi-Fi Grigio

VE796100

Remote control

Fully manageable via smartphone and tablet app

Clima Vemer

Clima Vemer is the smart app designed to provide total control over Vemer's entire range of Smart thermostats and humidistats even remotely. With this app, users can adjust their heating and air conditioning system settings quickly and conveniently, ensuring maximum comfort and energy efficiency, all through Internet connectivity.

App features

- **Program management**
  Allows creating, editing, and renaming programs directly on the smartphone.
- **On / Off**
  Allows switching the air-conditioning system on and off.
- **Temperature management**
  Allows changing the operating temperature values.
- **Holiday**
  Allows setting vacation days during which the system remains off.
- **Local operation**
  Allows controlling the device exclusively via app, ignoring changes made via the keypad.
- **Room Management**
  In each home, office or building, it allows the identification of various rooms (Living Room, Bathroom, Room,...).
- **Building management**
  It allows you to create the home, office, and general buildings that group devices together.
- **Alarm notifications**
  Allows setting alarm notifications (e.g. exceeding preset thresholds) to be notified by email or via push notification.

Product variants

Oikos Wi-Fi Bianco

VE796000

Weekly Wi-Fi smart thermostat, 2-module flush-mounted, 230 Vac, without display.
White colour

Model variants

OIKOS WI-FI-INT

Suitable only for installation on round flush-mounted boxes.

OIKOS WI-FI.NOW

Specifically designed for the BTicino Living Now® cover frame

Vemer S.p.A. declines all responsibility for the use of the products for purposes other than those for which they are intended, as indicated in the technical documentation. Vemer S.p.A. reserves the right to make, without prior notice, such changes as may, in its sole discretion, improve the technical and functional characteristics of the products and the related production logic. The technical characteristics and images of the products indicated are given for information only and are not binding in any way, since they may be modified without prior notice.

Revision date: 2026-02-02

Compatible cover frames

ABB
ABB Mylos series

Ave
Ave S44 series

Bticino
Bticino Axolute series

Bticino
Bticino Axolute Air series

Bticino
Bticino Light series

Bticino
Bticino Living International series

Bticino
Bticino Living Now series*

Bticino
Bticino Livinglight series

Bticino
Bticino Livinglight Air series

Bticino
Bticino MatixGO series*

Gewiss
Gewiss Chorus series

Vimar
Vimar Arké series

Vimar
Vimar Eikon series

Vimar
Vimar Eikon Evo series

Vimar
Vimar Plana series

* via accessory not included in the package, which can be purchased separately (see dedicated section)
For information on whether different cover frames can be used, contact the technical service department

Accessories compatible with the product

NOW.KIT 3 colori
VE793400
BTicino Living Now® kit for 2-module devices. Colours white, black and sand

NOW.KIT Bianco
VE793500
BTicino Living Now® kit for 2-module devices. White colour

NOW.KIT Nero
VE793600
BTicino Living Now® kit for 2-module devices. Black colour

NOW.KIT Sabbia
VE793700
BTicino Living Now® kit for 2-module devices. Sand colour

Adattatore.Matix Go® 2M
VE800000
Adapter for the BTicino Matix Go® cover cover frame for 2-module products

Reference standards

Compliance with Community Directives:

• 2014/53/UE (RED) • 2011/65/UE e 2015/863/UE (ROHS)

is declared with reference to the following Standards:

• EN IEC 60730-2-7 • EN IEC 60730-2-9 • EN IEC 62311 • ETSI EN 300 328 • ETSI EN 301 489-1 • ETSI EN 301 489-17 • EN 18031-1 • EN IEC 63000

Vemer S.p.A. declines all responsibility for the use of the products for purposes other than those for which they are intended, as indicated in the technical documentation. Vemer S.p.A. reserves the right to make, without prior notice, such changes as may, in its sole discretion, improve the technical and functional characteristics of the products and the related production logic. The technical characteristics and images of the products indicated are given for information only and are not binding in any way, since they may be modified without prior notice.