# Oikos Wi-FI.NOW Bianco

VE796002





**[Model variant]**

230 Vac smart thermostat with Wi-Fi, compact design, weekly programming, for 2-module flush-mounted installation. Device designed for room temperature regulation in heating mode (winter) and cooling mode (summer). Thanks to the Wi-Fi connection, the device can be remotely controlled in all its functions, using the free app available for iOS and Android. Setup is easy using the phone's Bluetooth connection. Programming, switching on the system, changing the operating settings and creating new programmes are operations that can be all performed easily and from anywhere thanks to the integrated Wi-Fi module that connects the device to the internet through the home router. Adaptable exclusively to the BTicino® Living Now cover frame.

## General features

- For installation on 2-module flush-mounted boxes with 45 mm high
- Terminal block on the back of the device for connecting load and power supply
- LED for system status indication
- "T" configuration/programming key
- Integrated Bluetooth (BLE 5.0) and Wi-Fi module (compatible with 802.11 b/g/n standards)
- Full programming and management via application
- Application for iOS and Android systems
- Compatible with Google Home and Amazon Alexa
- Automatic weekly programming with 3 temperature levels: T1, T2, T3
- Temperature control: on/off (with adjustable differential) or proportional
- Temperature compensation of +/-5 °C via settable parameter
- Automatic summer/sunshine time change and automatic synchronisation of date and time when connected to Wi-Fi network
- Anti-freeze temperature to prevent system freezing when the device is in OFF state
- Emergency control: manual operation and setpoint adjustment via Bluetooth in case of Wi-Fi failure
- Alarm warning (e-mail) if the detected temperature exceeds the set minimum or maximum value
- Classification according to point 6 of European Commission Communication 2014/C 207/02: class IV
- Supplied supports exclusively compatible with the BTicino® Living Now cover frame

## Technical specifications

| | |
|---|---|
| **Power supply** | |
| Power supply | 230 Vac (-15% ÷ +10%) |
| Frequency | 50 / 60 Hz |
| **Temperature settings** | |
| Settable temperatures | 3 + antifreeze + manual |
| Temperature setting range Manual | 2 ÷ 50 °C |
| Temperature setting range Automatic | 2 ÷ 50 °C |
| Temperature setting range Antifreeze (Off) | OFF, 1 ÷ 50 °C |
| Measured temperature compensation range | - 5 ÷ 5 °C |
| **Parameter settings** | |
| Type of adjustment | ON-OFF or proportional |
| Differential/Hysteresis | 0.1 ÷ 1 °C |

Vemer S.p.A. declines all responsibility for the use of the products for purposes other than those for which they are intended, as indicated in the technical documentation. Vemer S.p.A. reserves the right to make, without prior notice, such changes as may, in its sole discretion, improve the technical and functional characteristics of the products and the related production logic. The technical characteristics and images of the products indicated are given for information only and are not binding in any way, since they may be modified without prior notice.

| | |
|---|---|
| **Parameter settings** | |
| Modes of operation | Summer<br>Winter<br>Off |
| Programming | Weekly |
| Programming resolution | 1 hour |
| **Measure** | |
| Temperature measuring range | 0 ÷ 50 °C |
| Temperature display resolution | 0.1 °C |
| Temperature measurement accuracy | 0.5 °C |
| **Functions** | |
| Timing function | ✓ |
| Delay function | ✓ |
| Measured temperature compensation function | ✓ |
| Manageable by application | ✓ |
| Manageable by virtual assistant | ✓ |
| **Connectivity** | |
| Transmission frequency | 2,4 GHz (Wi-Fi)<br>2400 - 2483,5 MHz (Bluetooth) |
| Maximum transmitted radio frequency power | 18,3 dBm (Wi-Fi)<br>20 dBm (Bluetooth) |
| **Operating conditions** | |
| Operating temperature range | 0 ÷ 50 °C |
| Relative humidity | 20% ÷ 90% non-condensing RH |
| Storage temperature range | -25 ÷ 70 °C |
| **Approvals and certifications** | |
| Classification according to point 6 of Communication 2014/C 207/02 of the European Commission: | Class IV |
| **Viewing** | |
| Display | No display |
| **Outputs** | |
| Relay number | 1 |
| Relay type | Normally open |
| Relay capacity at 250 Vac | 5 A |
| **Terminations** | |
| Maximum cable cross-section | 1.5 mm² |
| **Mechanical features** | |
| Protection degree | IP40 |


Vemer S.p.A. declines all responsibility for the use of the products for purposes other than those for which they are intended, as indicated in the technical documentation. Vemer S.p.A. reserves the right to make, without prior notice, such changes as may, in its sole discretion, improve the technical and functional characteristics of the products and the related production logic. The technical characteristics and images of the products indicated are given for information only and are not binding in any way, since they may be modified without prior notice.

# Oikos Wi-FI.NOW Bianco

VE796002



| | |
|---|---|
| **Physical features** | |
| Color | White |
| **Overall dimensions** | |
| Height (A) | 40 mm |
| Width (B) | 40 mm |
| Depth (C) | 42 mm |

## Dimensions

Front View

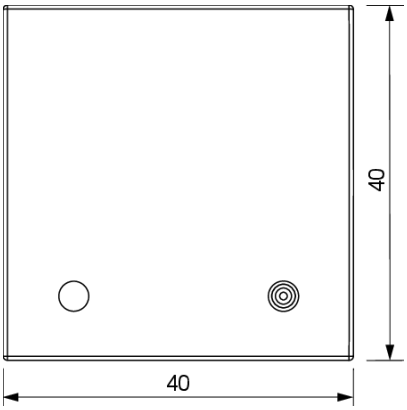


Side View

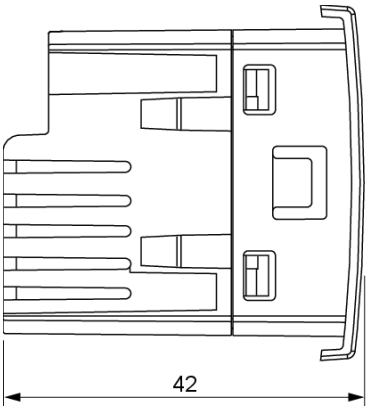


## Wiring diagram

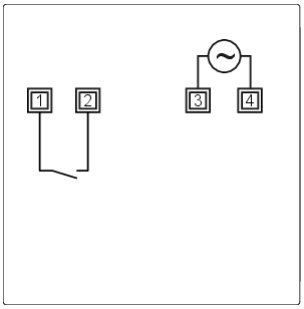


Vemer S.p.A. declines all responsibility for the use of the products for purposes other than those for which they are intended, as indicated in the technical documentation. Vemer S.p.A. reserves the right to make, without prior notice, such changes as may, in its sole discretion, improve the technical and functional characteristics of the products and the related production logic. The technical characteristics and images of the products indicated are given for information only and are not binding in any way, since they may be modified without prior notice.

# Oikos Wi-FI.NOW Bianco

VE796002



## Remote control

Fully manageable via smartphone and tablet app

### Clima Vemer

Clima Vemer is the smart app designed to provide total control over Vemer's entire range of Smart thermostats and humidistats even remotely. With this app, users can adjust their heating and air conditioning system settings quickly and conveniently, ensuring maximum comfort and energy efficiency, all through Internet connectivity.

## App features

• **Program management**
Allows creating, editing, and renaming programs directly on the smartphone.

• **On / Off**
Allows switching the air-conditioning system on and off.

• **Temperature management**
Allows changing the operating temperature values.

• **Holiday**
Allows setting vacation days during which the system remains off.

• **Local operation**
Allows controlling the device exclusively via app, ignoring changes made via the keypad.

• **Room Management**
In each home, office or building, it allows the identification of various rooms (Living Room, Bathroom, Room,...).

• **Building management**
It allows you to create the home, office, and general buildings that group devices together.

• **Alarm notifications**
Allows setting alarm notifications (e.g. exceeding preset thresholds) to be notified by email or via push notification.

## Product variants

### Oikos Wi-FI.NOW Nero

VE796202

Weekly Wi-Fi smart thermostat, 2-module flush-mounted, 230 Vac, without display, compatible with BTicino Living Now® cover frame. Black colour

### Oikos Wi-FI.NOW Sabbia

VE796302

Weekly Wi-Fi smart thermostat, 2-module flush-mounted, 230 Vac, without display, compatible with BTicino Living Now® cover frame. Sand colour

## Compatible cover frames

### Bticino

Bticino Living Now series

### Reference standards

Compliance with Community Directives:

**• 2014/53/UE (RED) • 2011/65/UE e 2015/863/UE (ROHS)**

is declared with reference to the following Standards:

**• EN IEC 60730-2-7 • EN IEC 60730-2-9 • EN 62479 • ETSI EN 300 328 • ETSI EN 301 489-1 • ETSI EN 301 489-17 • EN 18031-1 • EN IEC 63000**

Vemer S.p.A. declines all responsibility for the use of the products for purposes other than those for which they are intended, as indicated in the technical documentation. Vemer S.p.A. reserves the right to make, without prior notice, such changes as may, in its sole discretion, improve the technical and functional characteristics of the products and the related production logic. The technical characteristics and images of the products indicated are given for information only and are not binding in any way, since they may be modified without prior notice.



Revision date: 2026-02-02