ECO.X-W

VN160800

Smart thermostats / Climate Control



Battery-operated wall-mounted electronic smart thermostat with weekly programming and easy programming function. Device designed for room temperature regulation in heating mode (winter).

General features

- Plastic base for wall-mounted installation or for covering a 3-module flush-mounted box
- Two convenient knobs for setting operating temperatures
- Display showing measured temperature and set programming
- Three settable temperatures: economy temperature, comfort temperature, manual mode temperature
- On/off temperature regulation
- Low-battery indication
- Classification according to point 6 of European Commission Communication 2014/C 207/02: class I

Technical specifications

Power supply	
Power supply	2 batteries (AAA) 1.5 V Alkaline NOT rechargeable
Battery autonomy	12 months
Power reserve	2 minutes
Temperature settings	
Settable temperatures	2 + manual
Temperature setting range Manual	2 ÷ 30 °C
Temperature setting range Automatic	2 ÷ 30 °C
Parameter settings	
Type of adjustment	ON-OFF
Differential/Hysteresis	0.3 °C (fixed differential)
Modes of operation	Winter
Programming	Weekly
Programming resolution	1 hour
Measure	
Temperature measuring range	0 ÷ 40 °C
Temperature display resolution	0.1 °C
Temperature measurement accuracy	0.5 °C

Vemer S.p.A. declines all responsibility for the use of the products for purposes other than those for which they are intended, as indicated in the technical documentation. Vemer S.p.A. reserves the right to make, without prior notice, such changes as may, in its sole discretion, improve the technical and functional characteristics of the products and the related production logic. The technical characteristics and images of the products indicated are given for information only and are not binding in any way, since they may be modified without prior notice.

Revision date: 2026-02-02

Operating conditions	
Operating temperature range	0 ÷ 50 °C
Relative humidity	20% ÷ 90% non-condensing RH
Storage temperature range	-25 ÷ 70 °C
Approvals and certifications	
Classification according to point 6 of Communication 2014/C 207/02 of the European Commission:	Class I
Viewing	
Display	LCD
Outputs	
Relay number	1
Relay capacity at 250 Vac	5 A
Terminations	
Maximum cable cross-section	1.5 mm²
Mechanical features	
Protection degree	IP40
Physical features	
Color	White
Device command	Knob
Overall dimensions	
Height (A)	91 mm
Width (B)	115 mm
Depth (C)	29 mm

Dimensions

Front View

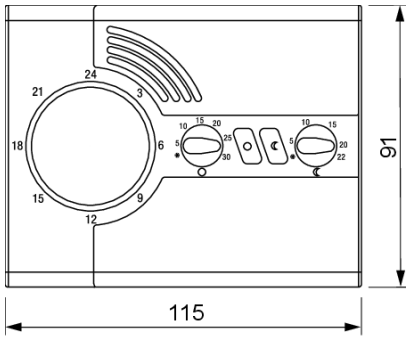

Side View

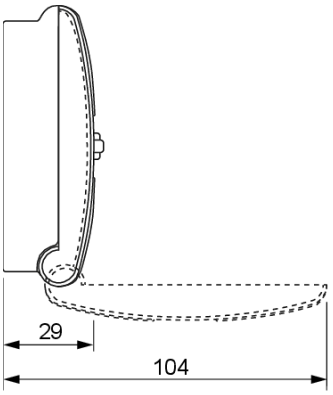

Vemer S.p.A. declines all responsibility for the use of the products for purposes other than those for which they are intended, as indicated in the technical documentation. Vemer S.p.A. reserves the right to make, without prior notice, such changes as may, in its sole discretion, improve the technical and functional characteristics of the products and the related production logic. The technical characteristics and images of the products indicated are given for information only and are not binding in any way, since they may be modified without prior notice.

Wiring diagram

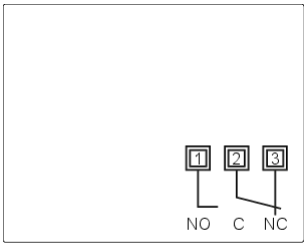

Reference standards

Compliance with Community Directives:

• 2014/35/UE (LVD) • 2014/30/UE (EMCD) • 2011/65/UE e 2015/863/UE (ROHS)

is declared with reference to the following Standards:

• EN IEC 60730-2-7 • EN IEC 60730-2-9 • EN IEC 63000

Vemer S.p.A. declines all responsibility for the use of the products for purposes other than those for which they are intended, as indicated in the technical documentation. Vemer S.p.A. reserves the right to make, without prior notice, such changes as may, in its sole discretion, improve the technical and functional characteristics of the products and the related production logic. The technical characteristics and images of the products indicated are given for information only and are not binding in any way, since they may be modified without prior notice.