KEO-B

VN170700



3-module battery-operated electronic thermostat with knob for flush-mounted installation (type 503). Device designed for room temperature regulation in heating mode (winter) and cooling mode (summer).

General features

- For installation on 3-module flush-mounted boxes (type 503)
- Terminal block on the back of the device for connecting load and external contact
- Temperature control: on/off (with adjustable differential) or proportional
- Anti-freeze temperature to prevent system freezing when the device is in OFF state
- Possibility to limit the range of settable temperature values
- Digital input for connecting an external contact to reduce the set temperature by 3 °C
- Classification according to point 6 of European Commission Communication 2014/C 207/02: class IV
- White and anthracite grey front panels included in the package
- Silver-coloured cover frame can be purchased separately
- Supplied supports compatible with cover frames of the main switch and socket systems

Technical specifications

Power supply	
Power supply	2 batteries (AAA) 1.5 V Alkaline NOT rechargeable
Battery autonomy	12 months
Temperature settings	
Temperature setting range	5 ÷ 35 °C
Temperature setting range Antifreeze (Off)	2 (fissa) °C
Parameter settings	
Type of adjustment	ON-OFF or proportional
Differential/Hysteresis	0.3 °C (fixed differential)
Modes of operation	Summer Winter
Measure	
Temperature measuring range	0 ÷ +50 °C °C
Temperature measurement accuracy	0.5 °C
Operating conditions	
Operating temperature range	0 ÷ 50 °C
Relative humidity	20% ÷ 90% non-condensing RH

Vemer S.p.A. declines all responsibility for the use of the products for purposes other than those for which they are intended, as indicated in the technical documentation. Vemer S.p.A. reserves the right to make, without prior notice, such changes as may, in its sole discretion, improve the technical and functional characteristics of the products and the related production logic. The technical characteristics and images of the products indicated are given for information only and are not binding in any way, since they may be modified without prior notice.

Revision date: 2026-02-02

Operating conditions	
Storage temperature range	-25 ÷ 70 °C
Approvals and certifications	
Classification according to point 6 of Communication 2014/C 207/02 of the European Commission:	Class IV
Viewing	
Display	No display
Inputs	
Digital input	✓
No. digital inputs	1
Auxiliary input features	For Setpoint reduction
Outputs	
Relay number	1
Relay type	Heat exchange
Relay capacity at 250 Vac	5 A
Terminations	
Maximum cable cross-section	1.5 mm²
Mechanical features	
Protection degree	IP40
Physical features	
Color	White Anthracite grey
Device command	Knob
Overall dimensions	
Height (A)	50 mm
Width (B)	72 mm
Depth (C)	53 mm

Vemer S.p.A. declines all responsibility for the use of the products for purposes other than those for which they are intended, as indicated in the technical documentation. Vemer S.p.A. reserves the right to make, without prior notice, such changes as may, in its sole discretion, improve the technical and functional characteristics of the products and the related production logic. The technical characteristics and images of the products indicated are given for information only and are not binding in any way, since they may be modified without prior notice.

Dimensions

Front View

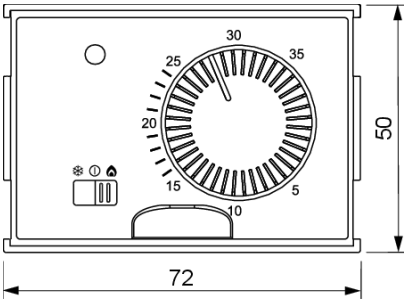

Side View

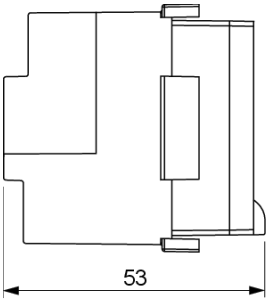

Wiring diagram

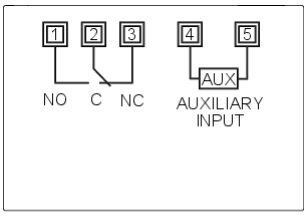

With external contact closed:

- Setpoint = Setpoint -3 °C

Product variants

KEO-A

VN171500

Flush-mount thermostat (three modules) rated for 230 VAC with a knob. Available in white or anthracite gray.

Vemer S.p.A. declines all responsibility for the use of the products for purposes other than those for which they are intended, as indicated in the technical documentation. Vemer S.p.A. reserves the right to make, without prior notice, such changes as may, in its sole discretion, improve the technical and functional characteristics of the products and the related production logic. The technical characteristics and images of the products indicated are given for information only and are not binding in any way, since they may be modified without prior notice.

Compatible cover frames

ABB
ABB Chiara series

ABB
ABB Mylos series

Ave
Ave S44 series

Ave
Ave Smart Series

Ave
Ave Tekla Series

Bticino
Bticino Axolute series

Bticino
Bticino Axolute Air series*

Bticino
Bticino Light series

Bticino
Bticino Light tech series

Bticino
Bticino Living International series

Bticino
Bticino Livinglight series

Bticino
Bticino Livinglight Air series

Bticino
Bticino Matix series

Bticino
Bticino MatixGO series*

Gewiss
Gewiss Chorus series

Vimar
Vimar Arké series

Vimar
Vimar Eikon series

Vimar
Vimar Eikon Evo series

Vimar
Vimar Idea series

Vimar
Vimar Linea series*

Vimar
Vimar Plana series

Vimar
Vimar Plana UP series*

* via accessory not included in the package, which can be purchased separately (see dedicated section)
For information on whether different cover frames can be used, contact the technical service department

Accessories compatible with the product

Fr.Keo-B Argento
VE763100
Silver-coloured front cover frame and knob for Keo-B

AXO AIR + TEKLA
VE767500
Support for BTicino Axolute Air®, Ave Tekla® or Ave Smart® cover frame for 3-module flush-mounted products

LINEA GRIGIO
VE795700
Support for the Vimar Linea® cover frame for 3-module products. Colour black

LINEA BIANCO
VE795600
Support for the Vimar Linea® cover frame for 3-module products. Colour white

Supporto.Matix GO®
VE797100
Support for the BTicino Matix Go® cover frame for 3-module products

VPU
VE801600
Vimar Plana Up® cover cover frame bracket for three-module products

Reference standards

Compliance with Community Directives:

• 2014/35/UE (LVD) • 2014/30/UE (EMCD) • 2011/65/UE e 2015/863/UE (ROHS)
is declared with reference to the following Standards:

• EN IEC 60730-2-9 • EN IEC 63000

Vemer S.p.A. declines all responsibility for the use of the products for purposes other than those for which they are intended, as indicated in the technical documentation. Vemer S.p.A. reserves the right to make, without prior notice, such changes as may, in its sole discretion, improve the technical and functional characteristics of the products and the related production logic. The technical characteristics and images of the products indicated are given for information only and are not binding in any way, since they may be modified without prior notice.