Klima LCD 230

VE730800



230 Vac wall-mounted electronic thermostat with LCD display. Device designed for room temperature regulation in heating mode (winter) and cooling mode (summer). Keyboard consists of two physical keys immediately below the display.

General features

- Plastic base for wall-mounted installation
- LCD display for visualisation of measured temperature
- Terminal block on the back of the device for connecting load and power supply
- Temperature control: on/off (with adjustable differential) or proportional
- Anti-freeze temperature to prevent system freezing when the device is in OFF state
- Keypad lock function with password to prevent modifications by unauthorised people
- Possibility to limit the range of settable temperature values
- Classification according to point 6 of European Commission Communication 2014/C 207/02: class IV

Technical specifications

Power supply	
Power supply	230 Vac (-15% ÷ +10%)
Frequency	50 / 60 Hz
Temperature settings	
Temperature setting range	2 ÷ 50 °C
Temperature setting range Antifreeze (Off)	OFF, 1 ÷ 50 °C
Parameter settings	
Type of adjustment	ON-OFF or proportional
Differential/Hysteresis	0.1 ÷ 1 °C
Modes of operation	Summer Winter Off
Measure	
Temperature measuring range	0 ÷ +50 °C|-40 ÷ +60 °C °C
Temperature display resolution	0.1 °C
Temperature measurement accuracy	0.5 °C
Functions	
Keypad lock function	✓

Vemer S.p.A. declines all responsibility for the use of the products for purposes other than those for which they are intended, as indicated in the technical documentation. Vemer S.p.A. reserves the right to make, without prior notice, such changes as may, in its sole discretion, improve the technical and functional characteristics of the products and the related production logic. The technical characteristics and images of the products indicated are given for information only and are not binding in any way, since they may be modified without prior notice.

Revision date: 2026-02-02

Klima LCD 230

VE730800

Operating conditions	
Operating temperature range	0 ÷ 50 °C
Relative humidity	20% ÷ 90% non-condensing RH
Storage temperature range	-25 ÷ 70 °C
Approvals and certifications	
Classification according to point 6 of Communication 2014/C 207/02 of the European Commission:	Class IV
Viewing	
Display	LCD
Outputs	
Relay number	1
Relay type	Heat exchange
Relay capacity at 250 Vac	5 A
Terminations	
Maximum cable cross-section	1.5 mm²
Mechanical features	
Protection degree	IP40
Physical features	
Color	White
Device command	Keys
Overall dimensions	
Height (A)	84 mm
Width (B)	84 mm
Depth (C)	28 mm

Dimensions

Front View

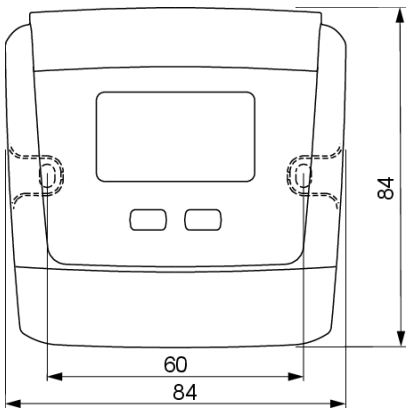

Side View

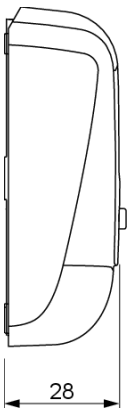

Vemer S.p.A. declines all responsibility for the use of the products for purposes other than those for which they are intended, as indicated in the technical documentation. Vemer S.p.A. reserves the right to make, without prior notice, such changes as may, in its sole discretion, improve the technical and functional characteristics of the products and the related production logic. The technical characteristics and images of the products indicated are given for information only and are not binding in any way, since they may be modified without prior notice.

Wiring diagram

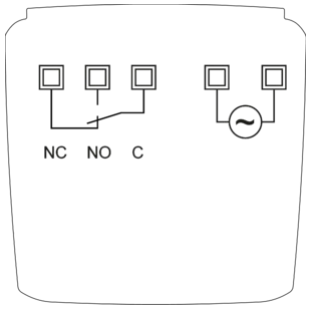

Reference standards

Compliance with Community Directives:

• 2014/35/UE (LVD) • 2014/30/UE (EMCD) • 2011/65/UE e 2015/863/UE (ROHS)

is declared with reference to the following Standards:

• EN IEC 60730-2-9 • EN IEC 63000

Vemer S.p.A. declines all responsibility for the use of the products for purposes other than those for which they are intended, as indicated in the technical documentation. Vemer S.p.A. reserves the right to make, without prior notice, such changes as may, in its sole discretion, improve the technical and functional characteristics of the products and the related production logic. The technical characteristics and images of the products indicated are given for information only and are not binding in any way, since they may be modified without prior notice.