Klima SW

VE023800



Wall-mounted mechanical gas membrane thermostat with knob, and summer/winter selector. Device designed for room temperature regulation in heating mode (winter) and cooling mode (summer).

General features

- Plastic base for wall-mounted installation
- Front knob for temperature setting
- For installation at altitudes >1000 m above sea level, calibration values are not guaranteed
- Classification according to point 6 of European Commission Communication 2014/C 207/02: class I

Technical specifications

Temperature settings	
Temperature setting range	5 ÷ 30 °C
Parameter settings	
Differential/Hysteresis	Δ 1.3 °C (± 0.2 °C)
Modes of operation	Summer Winter
Approvals and certifications	
Classification according to point 6 of Communication 2014/C 207/02 of the European Commission:	Class I
Viewing	
Display	No display
Outputs	
Relay capacity at 250 Vac	10 (1.5) A
Mechanical features	
Protection degree	IP20
Physical features	
Device command	Knob
Overall dimensions	
Height (A)	82.9 mm
Width (B)	76.5 mm

Vemer S.p.A. declines all responsibility for the use of the products for purposes other than those for which they are intended, as indicated in the technical documentation. Vemer S.p.A. reserves the right to make, without prior notice, such changes as may, in its sole discretion, improve the technical and functional characteristics of the products and the related production logic. The technical characteristics and images of the products indicated are given for information only and are not binding in any way, since they may be modified without prior notice.

Revision date: 2026-02-02

Overall dimensions	
Depth (C)	30.9 mm

Dimensions

Front View

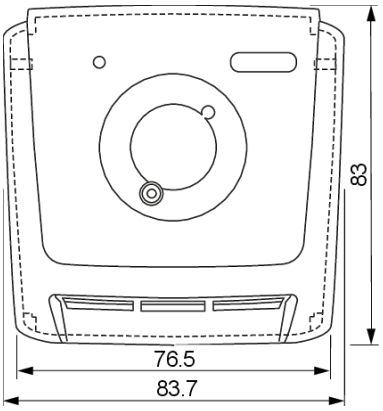

Side View

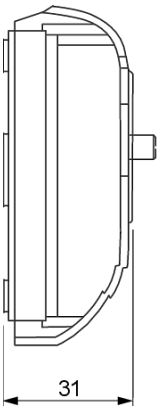

Wiring diagram

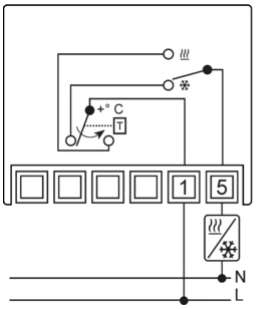

Vemer S.p.A. declines all responsibility for the use of the products for purposes other than those for which they are intended, as indicated in the technical documentation. Vemer S.p.A. reserves the right to make, without prior notice, such changes as may, in its sole discretion, improve the technical and functional characteristics of the products and the related production logic. The technical characteristics and images of the products indicated are given for information only and are not binding in any way, since they may be modified without prior notice.

Product variants

Klima 2

VE018800

Wall-mounted mechanical thermostat with knob and heating mode

Klima 3

VE019600

Mechanical wall-mounted thermostat with a knob and heating/cooling modes

Klima 3L

VE020400

Mechanical wall-mounted thermostat with a knob, heating/cooling modes, and an ON indicator light

Klima IN

VE022000

Mechanical wall-mounted thermostat with a knob, heating/cooling modes, and an ON/OFF switch

Klima SI

VE021200

Wall-mounted mechanical thermostat with knob, heating/cooling mode, ON/OFF switch and ON indicator light

Klima 2V

VE024600

Wall-mounted mechanical gas diaphragm thermostat with knob, heating/cooling mode, 2-speed selector and summer/winter selector

Klima 3V

VE268900

Mechanical wall-mounted thermostat with a knob, heating/cooling modes, a 3-speed selector, and an OFF switch

Reference standards

Compliance with Community Directives:

• 2014/35/UE (LVD) • 2014/30/UE (EMCD) • 2011/65/UE e 2015/863/UE (ROHS)

is declared with reference to the following Standards:

• EN IEC 60730-2-9 • EN IEC 63000

Vemer S.p.A. declines all responsibility for the use of the products for purposes other than those for which they are intended, as indicated in the technical documentation. Vemer S.p.A. reserves the right to make, without prior notice, such changes as may, in its sole discretion, improve the technical and functional characteristics of the products and the related production logic. The technical characteristics and images of the products indicated are given for information only and are not binding in any way, since they may be modified without prior notice.