TAMB cap

VE310900



Wall-mounted mechanical thermostat with spiral sensor and knob. Device designed for temperature regulation in dusty or dirty environments such as greenhouses and incubators.

General features

- Spiral sensor for ambient temperature detection
- Front knob for temperature setting
- Device with tinned copper capillary and bulb
- 6.3 mm Faston terminals with screw clamps

Technical specifications

Temperature settings	
Temperature setting range	5 ÷ 35 °C
Parameter settings	
Differential/Hysteresis	1.5 (± 1) °C
Operating conditions	
Insulation class	I
Viewing	
Display	No display
Outputs	
Relay capacity at 250 Vac	16 (2.5) A
Mechanical features	
Protection degree	IP54
Physical features	
Device command	Knob
Overall dimensions	
Height (A)	105 mm
Width (B)	105 mm
Depth (C)	48 mm

Vemer S.p.A. declines all responsibility for the use of the products for purposes other than those for which they are intended, as indicated in the technical documentation. Vemer S.p.A. reserves the right to make, without prior notice, such changes as may, in its sole discretion, improve the technical and functional characteristics of the products and the related production logic. The technical characteristics and images of the products indicated are given for information only and are not binding in any way, since they may be modified without prior notice.

Revision date: 2026-02-02

Dimensions

Front View

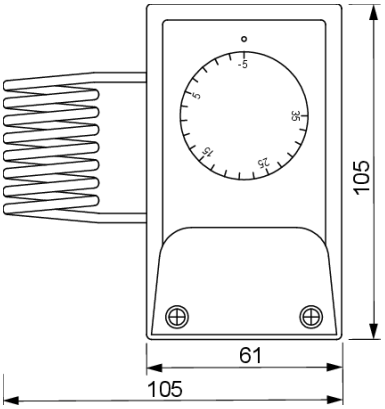

Side View

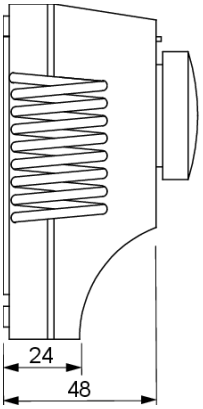

Wiring diagram

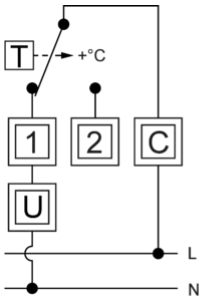

Reference standards

Compliance with Community Directives:

• 2014/35/UE (LVD) • 2014/30/UE (EMCD) • 2011/65/UE e 2015/863/UE (ROHS)

is declared with reference to the following Standards:

• EN IEC 60730-2-9 • EN IEC 63000

Vemer S.p.A. declines all responsibility for the use of the products for purposes other than those for which they are intended, as indicated in the technical documentation. Vemer S.p.A. reserves the right to make, without prior notice, such changes as may, in its sole discretion, improve the technical and functional characteristics of the products and the related production logic. The technical characteristics and images of the products indicated are given for information only and are not binding in any way, since they may be modified without prior notice.