TIMM-RB

VE309100



Double mechanical immersion thermostat with knob and reset key, particularly suitable for temperature control in boilers, water heaters, pumps and thermal equipment Copper stem length: 100 mm.

General features

- Single-pole liquid-expansion thermostat with ½" threaded thermowell mounting
- Front knob for intervention temperature adjustment
- Device equipped with a reset key

Technical specifications

Temperature settings	
Temperature setting range	30 ÷ 90 (± 3) °C
Parameter settings	
Differential/Hysteresis	4 (± 2) °C
Intervention threshold	99 °C
Functional characteristics	
Maximum head temperature	80 °C
Maximum bulb temperature	110 °C
Thermal gradient	< 1 °C/min
Operating conditions	
Insulation class	I
Maximum sheath pressure	10 bar
Viewing	
Display	No display
Outputs	
Relay capacity at 250 Vac	16 (5) A
Mechanical features	
Protection degree	IP40
Physical features	
Device command	Knob

Vemer S.p.A. declines all responsibility for the use of the products for purposes other than those for which they are intended, as indicated in the technical documentation. Vemer S.p.A. reserves the right to make, without prior notice, such changes as may, in its sole discretion, improve the technical and functional characteristics of the products and the related production logic. The technical characteristics and images of the products indicated are given for information only and are not binding in any way, since they may be modified without prior notice.

Revision date: 2026-02-02

Overall dimensions	
Height (A)	115 mm
Width (B)	86 mm
Depth (C)	172 mm
Dimensions	
Cable gland - thread	M20 x 1.5

Dimensions

Front View

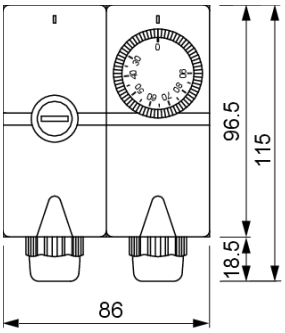

Side View

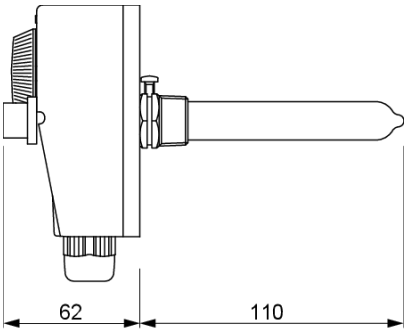

Wiring diagram

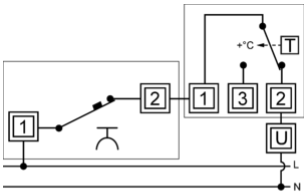

LIMITER
Terminal 1: common
Terminal 2: opens the circuit when the temperature is reached (99 °C to 4 °C)
CONTROLLER
Terminal 1: common
Terminal 2: opens the circuit when the set temperature is reached
Terminal 3: closes the circuit when the set temperature is reached

Reference standards

Compliance with Community Directives:

• 2014/35/UE (LVD) • 2014/30/UE (EMCD) • 2011/65/UE e 2015/863/UE (ROHS)

is declared with reference to the following Standards:

• EN IEC 60730-2-9 • EN IEC 63000

Vemer S.p.A. declines all responsibility for the use of the products for purposes other than those for which they are intended, as indicated in the technical documentation. Vemer S.p.A. reserves the right to make, without prior notice, such changes as may, in its sole discretion, improve the technical and functional characteristics of the products and the related production logic. The technical characteristics and images of the products indicated are given for information only and are not binding in any way, since they may be modified without prior notice.