# Humi

VE379400






230 Vac electronic humidistat with knob for humidity control, designed for 3-module flush-mounted boxes (type 503), for domestic and tertiary environments.

## General features

- For installation on 3-module flush-mounted boxes (type 503)
- Terminal block on the back of the device for connection to the dehumidifier (or humidifier) and power supply
- Signaling fault or values out of range by flashing LED
- White and anthracite grey front panels included in the package
- Supplied supports compatible with cover frames of the main switch and socket systems

## Technical specifications

| | |
|---|---|
| **Power supply** | |
| Power supply | 230 Vac (-15% ÷ +10%) |
| Frequency | 50 / 60 Hz |
| Absorption | 4 (0,5) VA (W) |
| **Humidity settings** | |
| Humidity setting range | OFF, 30% ÷ 90% RH |
| **Parameter settings** | |
| Differential/Hysteresis | ± 2.5% RH (fixed differential) |
| Modes of operation | Off<br>Dehumidification |
| **Settings** | |
| Tripping time | 1 minute |
| **Functional characteristics** | |
| Time between 2 commutations | 1 minute |
| **Operating conditions** | |
| Operating temperature range | 0 ÷ 50 °C |
| Storage temperature range | -25 ÷ 70 °C |
| **Viewing** | |
| Display | No display |
| **Outputs** | |
| Relay number | 1 |

Vemer S.p.A. declines all responsibility for the use of the products for purposes other than those for which they are intended, as indicated in the technical documentation. Vemer S.p.A. reserves the right to make, without prior notice, such changes as may, in its sole discretion, improve the technical and functional characteristics of the products and the related production logic. The technical characteristics and images of the products indicated are given for information only and are not binding in any way, since they may be modified without prior notice.



Revision date: 2026-02-02

# Humi

VE379400



| | |
|---|---|
| **Outputs** | |
| Relay type | Heat exchange |
| Relay capacity at 250 Vac | 5 (3) A |
| **Mechanical features** | |
| Protection degree | IP40 |
| **Physical features** | |
| Color | White<br>Anthracite grey |
| Device command | Knob |
| **Overall dimensions** | |
| Height (A) | 51 mm |
| Width (B) | 69 mm |
| Depth (C) | 51 mm |

## Dimensions

Front View

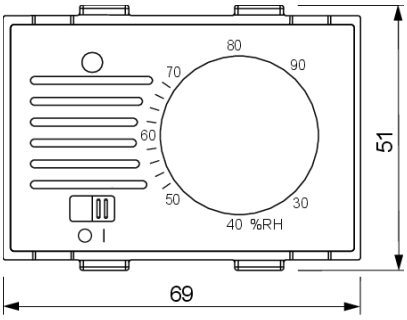


Side View

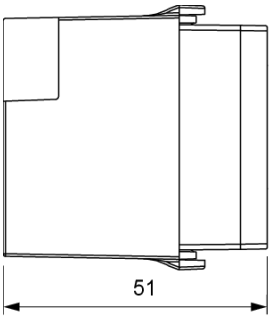


## Wiring diagram

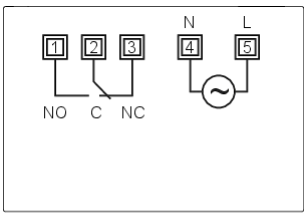


Vemer S.p.A. declines all responsibility for the use of the products for purposes other than those for which they are intended, as indicated in the technical documentation. Vemer S.p.A. reserves the right to make, without prior notice, such changes as may, in its sole discretion, improve the technical and functional characteristics of the products and the related production logic. The technical characteristics and images of the products indicated are given for information only and are not binding in any way, since they may be modified without prior notice.



Revision date: 2026-02-02

## Compatible cover frames

**ABB**
ABB Chiara series

**ABB**
ABB Mylos series

**Ave**
Ave S44 series

**Ave**
Ave Smart Series

**Ave**
Ave Tekla Series

**Bticino**
Bticino Axolute series

**Bticino**
Bticino Axolute Air series*

**Bticino**
Bticino Light series

**Bticino**
Bticino Light tech series

**Bticino**
Bticino Living International series

**Bticino**
Bticino Livinglight series

**Bticino**
Bticino Livinglight Air series

**Bticino**
Bticino Matix series

**Bticino**
Bticino MatixGO series*

**Gewiss**
Gewiss Chorus series

**Vimar**
Vimar Arké series

**Vimar**
Vimar Eikon series

**Vimar**
Vimar Eikon Evo series

**Vimar**
Vimar Idea series

**Vimar**
Vimar Linea series*

**Vimar**
Vimar Plana series

**Vimar**
Vimar Plana UP series*

* via accessory not included in the package, which can be purchased separately (see dedicated section)
For information on whether different cover frames can be used, contact the technical service department

## Accessories compatible with the product

**AXO AIR + TEKLA**
VE767500
Support for BTicino Axolute Air®, Ave Tekla® or Ave Smart® cover frame for 3-module flush-mounted products

**Supporto.Matix GO®**
VE797100
Support for the BTicino Matix Go® cover frame for 3-module products

**LINEA BIANCO**
VE795600
Support for the Vimar Linea® cover frame for 3-module products. Colour white

**LINEA GRIGIO**
VE795700
Support for the Vimar Linea® cover frame for 3-module products. Colour black

**VPU**
VE801600
Vimar Plana Up® cover cover frame bracket for three-module products

## Reference standards

Compliance with Community Directives:

**• 2014/35/UE (LVD) • 2014/30/UE (EMCD) • 2011/65/UE e 2015/863/UE (ROHS)**
is declared with reference to the following Standards:

**• EN IEC 60730-2-13 • EN IEC 63000**


Vemer S.p.A. declines all responsibility for the use of the products for purposes other than those for which they are intended, as indicated in the technical documentation. Vemer S.p.A. reserves the right to make, without prior notice, such changes as may, in its sole discretion, improve the technical and functional characteristics of the products and the related production logic. The technical characteristics and images of the products indicated are given for information only and are not binding in any way, since they may be modified without prior notice.