DUET-D

VP879100



Electromechanical time switch, 230 Vac, 48-tripper, daily programming. Backup power and replaceable battery via front drawer. DIN-rail mounted with 2 module size.

General features

- 48 trippers for activation time programming
- Each tripper covers 0.5 hours (30 minutes)
- Mode selection switch
- Dial for setting hours and minutes
- Sealable keyboard cover
- Battery replacement drawer
- Housing: 2-DIN module
- Three-position selector switch:
  - **0** always off
  - **I** always on
  - **A** automatic (according to the programming set via trippers)

Technical specifications

Power supply	
Power supply	230 Vac (-10% ÷ +10%)
Frequency	50 / 60 Hz
Absorption	0.5 W
Buffer battery type	V80H NiMH 3 V (Rechargeable)
Power reserve	150 hours
Parameter settings	
Programming	Daily
Minimum manoeuvring time	30 min
Measure	
Precision of manoeuvre	± 5 min
Watch accuracy	± 1 second/day at 23 °C

Vemer S.p.A. declines all responsibility for the use of the products for purposes other than those for which they are intended, as indicated in the technical documentation. Vemer S.p.A. reserves the right to make, without prior notice, such changes as may, in its sole discretion, improve the technical and functional characteristics of the products and the related production logic. The technical characteristics and images of the products indicated are given for information only and are not binding in any way, since they may be modified without prior notice.

Revision date: 2026-02-02

Operating conditions	
Operating temperature range	-10 ÷ 45 °C
Insulation class	II
Connectable loads	
Incandescent lamps	3000 W
Fluorescent lamps (neon)	1200 VA
Halogen lamps (low voltage)	2000 VA
Halogen lamps (230 V)	3000 W
Low Consumption Lamps (CLF)	1000 VA 900 VA
LED lamps	200 VA
Viewing	
Dial	24 hours
Number of trippers	48
Outputs	
Relay number	1
Relay capacity at 250 Vac	16 (4) A
Terminations	
Maximum cable cross-section	4 mm²
Mechanical features	
Protection degree	IP20
Physical features	
Device command	Trippers
Overall dimensions	
Height (A)	88 mm
Width (B)	36 mm
Depth (C)	66 mm

Vemer S.p.A. declines all responsibility for the use of the products for purposes other than those for which they are intended, as indicated in the technical documentation. Vemer S.p.A. reserves the right to make, without prior notice, such changes as may, in its sole discretion, improve the technical and functional characteristics of the products and the related production logic. The technical characteristics and images of the products indicated are given for information only and are not binding in any way, since they may be modified without prior notice.

Dimensions

Front View

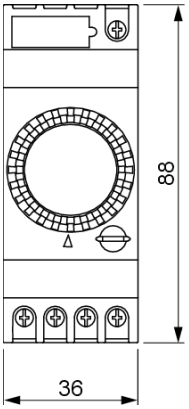

Side View

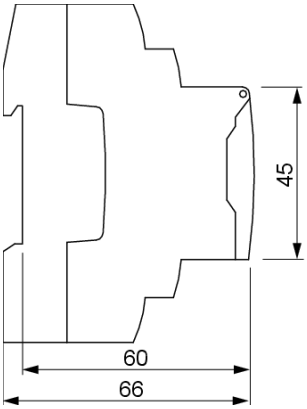

Wiring diagram

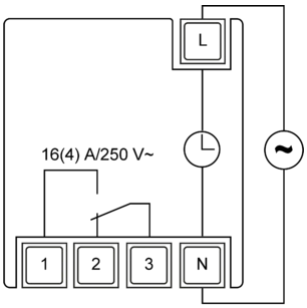

Graphic details

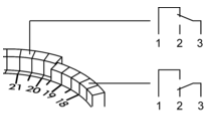

Model variants

DUET-ED

DIN-rail electromechanical time switch with trippers (2 modules) with daily programming.

DUET-D (115 V)

DIN-rail electromechanical time switch with trippers (2 modules) with daily programming.

Vemer S.p.A. declines all responsibility for the use of the products for purposes other than those for which they are intended, as indicated in the technical documentation. Vemer S.p.A. reserves the right to make, without prior notice, such changes as may, in its sole discretion, improve the technical and functional characteristics of the products and the related production logic. The technical characteristics and images of the products indicated are given for information only and are not binding in any way, since they may be modified without prior notice.

Accessories compatible with the product

V80H

VE787600

3 Volt button battery

Reference standards

Compliance with Community Directives:

• 2014/35/UE (LVD) • 2014/30/UE (EMCD) • 2011/65/UE e 2015/863/UE (ROHS)

is declared with reference to the following Standards:

• EN IEC 60730-2-7 • EN IEC 63000

Vemer S.p.A. declines all responsibility for the use of the products for purposes other than those for which they are intended, as indicated in the technical documentation. Vemer S.p.A. reserves the right to make, without prior notice, such changes as may, in its sole discretion, improve the technical and functional characteristics of the products and the related production logic. The technical characteristics and images of the products indicated are given for information only and are not binding in any way, since they may be modified without prior notice.