TE 200

VJ79720000



Electronic timer with selector switch, DIN-rail mounted (1 module), with 230 Vac power supply, for the management of lights in corridors, stairs, and cellars, in order to avoid unnecessary energy waste.

General features

- Two-position operation mode selector switch:
  - always on
  - timed
- Trimmer for timing adjustment: from 30 seconds to 20 minutes
- Signaling LEDs
  - Green: power present
  - Red: relay tripped
- Lights switch on as soon as the key is pressed.
- At the end of time “T” the lights switch off automatically
- Press the button again to extend the lighting time by an additional period
- Long press of the key (more than 5 seconds) forces timing T to 60 minutes.
- LEDs turn on as soon as the device is powered.
- Lights remain on indefinitely or until operating mode is changed

Technical specifications

Power supply	
Power supply	230 Vac (-15% ÷ +10%)
Frequency	50 / 60 Hz
Absorption	6 (1) VA (W)
Settings	
Tripping time	30 seconds ÷ 20 minutes
Functions	
Timing function	✓
Functional characteristics	
Current available for illuminated buttons	50 mA
Operating conditions	
Operating temperature range	0 ÷ 50 °C
Relative humidity	20% ÷ 90% non-condensing RH

Vemer S.p.A. declines all responsibility for the use of the products for purposes other than those for which they are intended, as indicated in the technical documentation. Vemer S.p.A. reserves the right to make, without prior notice, such changes as may, in its sole discretion, improve the technical and functional characteristics of the products and the related production logic. The technical characteristics and images of the products indicated are given for information only and are not binding in any way, since they may be modified without prior notice.

Revision date: 2026-02-02

Operating conditions	
Storage temperature range	-25 ÷ 70 °C
Connectable loads	
Incandescent lamps	2000 W
Fluorescent lamps (neon)	1000 VA
Halogen lamps (230 V)	2000 W
Low Consumption Lamps (CLF)	200 W
LED lamps	200 W
Outputs	
Relay number	1
Relay capacity at 250 Vac	16 (resistive load) A
Mechanical features	
Protection degree	IP20
Overall dimensions	
Height (A)	91 mm
Width (B)	18 mm
Depth (C)	65 mm

Dimensions

Front View

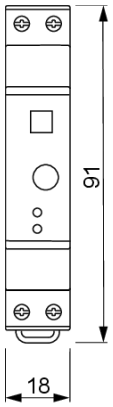

Side View

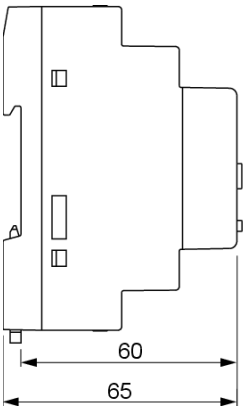

Vemer S.p.A. declines all responsibility for the use of the products for purposes other than those for which they are intended, as indicated in the technical documentation. Vemer S.p.A. reserves the right to make, without prior notice, such changes as may, in its sole discretion, improve the technical and functional characteristics of the products and the related production logic. The technical characteristics and images of the products indicated are given for information only and are not binding in any way, since they may be modified without prior notice.

Wiring diagram

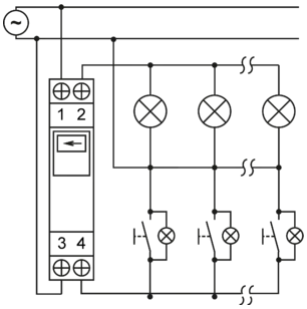

3-wire connection

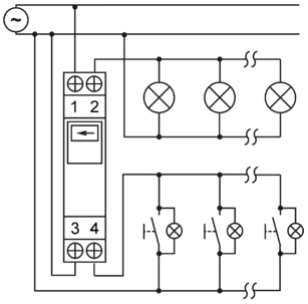

4-wire connection

Reference standards

Compliance with Community Directives:

• 2014/35/UE (LVD) • 2014/30/UE (EMCD) • 2011/65/UE e 2015/863/UE (ROHS)

is declared with reference to the following Standards:

• EN 60669-2-1 • EN IEC 60669-2-3 • EN IEC 63000

Vemer S.p.A. declines all responsibility for the use of the products for purposes other than those for which they are intended, as indicated in the technical documentation. Vemer S.p.A. reserves the right to make, without prior notice, such changes as may, in its sole discretion, improve the technical and functional characteristics of the products and the related production logic. The technical characteristics and images of the products indicated are given for information only and are not binding in any way, since they may be modified without prior notice.