TE 300

VE766700



Multifunctional electronic timer with selector and dip switch, DIN-rail mountable (1 module), 230 Vac power supply; manages lights in corridors, stairs, and cellars to avoid unnecessary energy waste. With shutdown warning to prevent sudden blackout at the end of timing

General features

- Two-position operation mode selector switch:
  - always on
  - timed
- Trimmer for timing adjustment: from 30 seconds to 20 minutes
- Signaling LEDs
  - Green: power present
  - Red: relay tripped
- Dip-switch for selecting the desired function
- Operating modes:
  - Always off
  - Timed resettable
  - Timed resettable with switch-off warning
  - Pulse timed
  - Pulse timed with switch-off warning
  - Step-by-step pulses
  - Always on
  - 60-minutes timed pulses

Technical specifications

Power supply	
Power supply	230 Vac (-15% ÷ +10%)
Frequency	50 / 60 Hz
Absorption	6 (1) VA (W)
Settings	
Tripping time	30 seconds ÷ 20 minutes
Functions	
Timing function	✓

Vemer S.p.A. declines all responsibility for the use of the products for purposes other than those for which they are intended, as indicated in the technical documentation. Vemer S.p.A. reserves the right to make, without prior notice, such changes as may, in its sole discretion, improve the technical and functional characteristics of the products and the related production logic. The technical characteristics and images of the products indicated are given for information only and are not binding in any way, since they may be modified without prior notice.

Revision date: 2026-02-02

Functional characteristics	
Current available for illuminated buttons	50 mA
Operating conditions	
Operating temperature range	0 ÷ 50 °C
Relative humidity	20% ÷ 90% non-condensing RH
Storage temperature range	-25 ÷ 70 °C
Connectable loads	
Incandescent lamps	2000 W
Fluorescent lamps (neon)	1000 VA
Halogen lamps (230 V)	2000 W
Low Consumption Lamps (CLF)	200 W
LED lamps	200 W
Outputs	
Relay number	1
Relay capacity at 250 Vac	16 (resistive load) A
Mechanical features	
Protection degree	IP20
Overall dimensions	
Height (A)	91 mm
Width (B)	18 mm
Depth (C)	65 mm

Dimensions

Front View

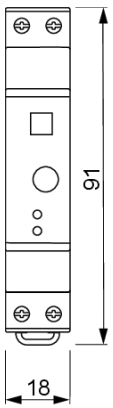

Side View

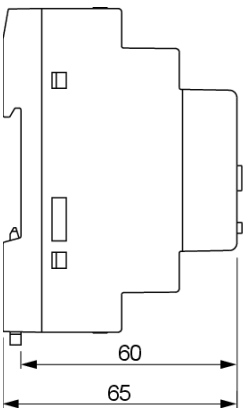

Vemer S.p.A. declines all responsibility for the use of the products for purposes other than those for which they are intended, as indicated in the technical documentation. Vemer S.p.A. reserves the right to make, without prior notice, such changes as may, in its sole discretion, improve the technical and functional characteristics of the products and the related production logic. The technical characteristics and images of the products indicated are given for information only and are not binding in any way, since they may be modified without prior notice.

Wiring diagram

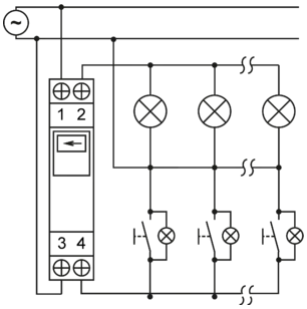

3-wire connection

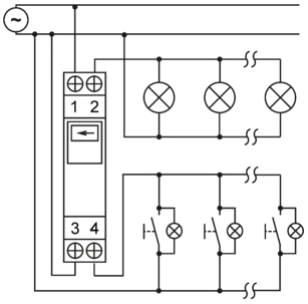

4-wire connection

Reference standards

Compliance with Community Directives:

• 2014/35/UE (LVD) • 2014/30/UE (EMCD) • 2011/65/UE e 2015/863/UE (ROHS)

is declared with reference to the following Standards:

• EN 60669-2-1 • EN IEC 60669-2-3 • EN IEC 63000

Vemer S.p.A. declines all responsibility for the use of the products for purposes other than those for which they are intended, as indicated in the technical documentation. Vemer S.p.A. reserves the right to make, without prior notice, such changes as may, in its sole discretion, improve the technical and functional characteristics of the products and the related production logic. The technical characteristics and images of the products indicated are given for information only and are not binding in any way, since they may be modified without prior notice.