SIL

VE765700



External brightness sensor for wall-mounted installation, compatible with CR1DIN and Memo AST LUX.

General features

- Wall mounting
- Compatible with CR1DIN and Memo AST Lux
- Protection degree: IP65
- Operating temperature: -20 °C to 50 °C
- Maximum distance between probe and device: approx. 50 m
- Cable type: double-insulated

Technical specifications

Connectivity	
Maximum distance between device and actuator or probe	50 m
Operating conditions	
Operating temperature range	-20 ÷ 50 °C
Mechanical features	
Protection degree	IP65
Overall dimensions	
Height (A)	51 mm
Width (B)	48 mm
Depth (C)	48 mm
Diameter dimension	
Dimension Ø - A	37 mm

Vemer S.p.A. declines all responsibility for the use of the products for purposes other than those for which they are intended, as indicated in the technical documentation. Vemer S.p.A. reserves the right to make, without prior notice, such changes as may, in its sole discretion, improve the technical and functional characteristics of the products and the related production logic. The technical characteristics and images of the products indicated are given for information only and are not binding in any way, since they may be modified without prior notice.

Revision date: 2026-02-02

Dimensions

Front View

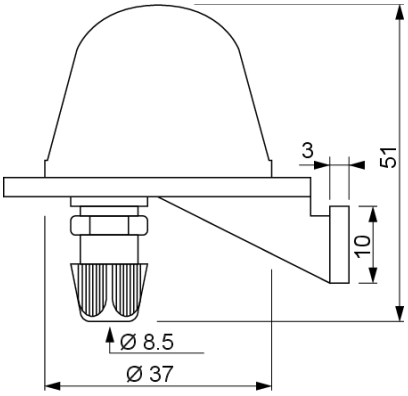

Side View

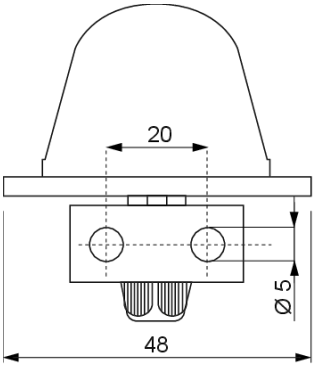

Reference standards

Compliance with Community Directive:

• **2011/65/UE e 2015/863/UE (ROHS)**

is declared by reference to the following Standard:

• **EN IEC 63000**

Vemer S.p.A. declines all responsibility for the use of the products for purposes other than those for which they are intended, as indicated in the technical documentation. Vemer S.p.A. reserves the right to make, without prior notice, such changes as may, in its sole discretion, improve the technical and functional characteristics of the products and the related production logic. The technical characteristics and images of the products indicated are given for information only and are not binding in any way, since they may be modified without prior notice.