# Sensor 140

VE212700





Motion sensor with wall installation and infrared technology, 230 Vac power supply, 140° operating range and IP55 protection degree. White colour.

## General features

- Two operating modes (normal mode and permanent activity)
- Adjustment of delay, sensitivity, and coverage using trimmers.
- Rotatable and tiltable sensor
- Possibility to apply detection area limiters (included)

## Technical specifications

| | |
|---|---|
| **Power supply** | |
| Power supply | 230 Vac (-15% ÷ +10%) |
| Frequency | 50 / 60 Hz |
| Absorption | 6 VA |
| **Settings** | |
| Tripping time | 3 seconds ÷ 30 minutes |
| Intervention Brightness Range | 5 - 30 - 2000 lux |
| **Functional characteristics** | |
| Detection angle | 140 ° |
| Sensing range | 12 meters (front)<br>8 meters (lateral) |
| **Operating conditions** | |
| Operating temperature range | -20 ÷ 40 °C |
| Relative humidity | 10% ÷ 90% non-condensing RH |
| **Connectable loads** | |
| Incandescent lamps | 1000 W |
| Fluorescent lamps (neon) | 600 VA |
| Halogen lamps (low voltage) | 600 VA |
| Halogen lamps (230 V) | 1000 W |

Vemer S.p.A. declines all responsibility for the use of the products for purposes other than those for which they are intended, as indicated in the technical documentation. Vemer S.p.A. reserves the right to make, without prior notice, such changes as may, in its sole discretion, improve the technical and functional characteristics of the products and the related production logic. The technical characteristics and images of the products indicated are given for information only and are not binding in any way, since they may be modified without prior notice.



Revision date: 2026-02-02

# Sensor 140

VE212700



| | |
|---|---|
| **Connectable loads** | |
| Low Consumption Lamps (CLF) | 600 VA |
| LED lamps | 60 VA |
| **Mechanical features** | |
| Protection degree | IP55 |
| **Physical features** | |
| Color | White |
| **Overall dimensions** | |
| Height (A) | 80 mm |
| Width (B) | 72 mm |
| Depth (C) | 100 mm |

## Dimensions

Front View

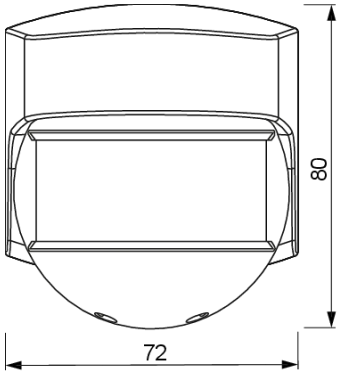


Side View

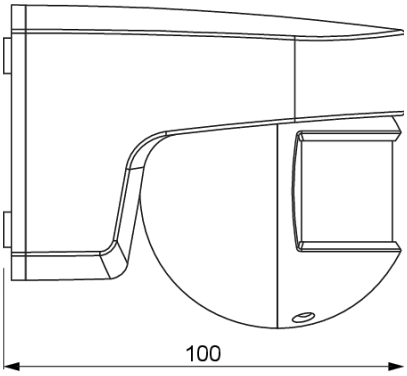


## Wiring diagram

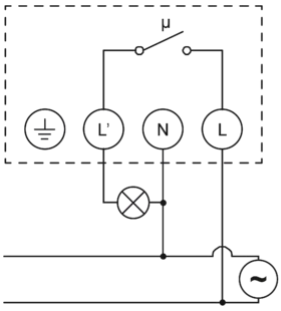


## Graphic details

Vemer S.p.A. declines all responsibility for the use of the products for purposes other than those for which they are intended, as indicated in the technical documentation. Vemer S.p.A. reserves the right to make, without prior notice, such changes as may, in its sole discretion, improve the technical and functional characteristics of the products and the related production logic. The technical characteristics and images of the products indicated are given for information only and are not binding in any way, since they may be modified without prior notice.

# Sensor 140

VE212700



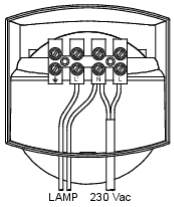




Horizontal rotation 180°



Vertical rotation 45°

## Model variants

### SENSOR 140 BLISTER

Wall-mounted motion sensor with infrared technology and 140° detection range.

## Reference standards

Compliance with Community Directives:

**• 2014/35/UE (LVD) • 2014/30/UE (EMCD) • 2011/65/UE e 2015/863/UE (ROHS)**

is declared with reference to the following Standards:

**• EN 60669-2-1 • EN IEC 63000**

Vemer S.p.A. declines all responsibility for the use of the products for purposes other than those for which they are intended, as indicated in the technical documentation. Vemer S.p.A. reserves the right to make, without prior notice, such changes as may, in its sole discretion, improve the technical and functional characteristics of the products and the related production logic. The technical characteristics and images of the products indicated are given for information only and are not binding in any way, since they may be modified without prior notice.



Revision date: 2026-02-02