Sensor 200

VE213500



Motion sensor with wall installation and infrared technology, 230 Vac power supply, 200° operating range and IP55 protection degree. White colour.

General features

- Two operating modes (normal mode and permanent activity)
- Adjustment of delay, sensitivity, and coverage using trimmers.
- Rotatable and tiltable sensor
- Possibility to apply detection area limiters (included)

Technical specifications

Power supply	
Power supply	230 Vac (-15% ÷ +10%)
Frequency	50 / 60 Hz
Absorption	6 VA
Settings	
Tripping time	3 seconds ÷ 30 minutes
Intervention Brightness Range	5 - 30 - 2000 lux
Functional characteristics	
Detection angle	200 °
Sensing range	12 meters (front) 8 meters (lateral)
Operating conditions	
Operating temperature range	-20 ÷ 40 °C
Relative humidity	10% ÷ 90% non-condensing RH
Connectable loads	
Incandescent lamps	1000 W
Fluorescent lamps (neon)	600 VA
Halogen lamps (low voltage)	600 VA
Halogen lamps (230 V)	1000 W

Vemer S.p.A. declines all responsibility for the use of the products for purposes other than those for which they are intended, as indicated in the technical documentation. Vemer S.p.A. reserves the right to make, without prior notice, such changes as may, in its sole discretion, improve the technical and functional characteristics of the products and the related production logic. The technical characteristics and images of the products indicated are given for information only and are not binding in any way, since they may be modified without prior notice.

Revision date: 2026-02-02

Sensor 200

VE213500

Connectable loads	
Low Consumption Lamps (CLF)	600 VA
LED lamps	60 VA
Mechanical features	
Protection degree	IP55
Physical features	
Color	White
Overall dimensions	
Height (A)	80 mm
Width (B)	72 mm
Depth (C)	100 mm

Dimensions

Front View

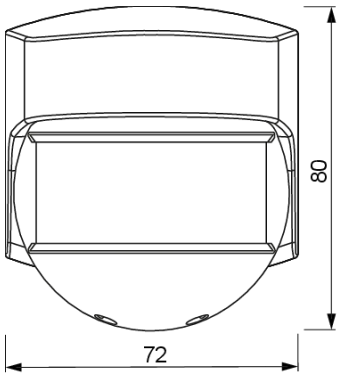

Side View

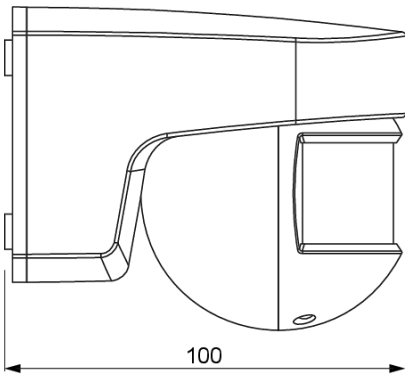

Wiring diagram

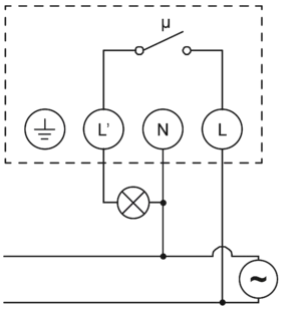

Graphic details

Vemer S.p.A. declines all responsibility for the use of the products for purposes other than those for which they are intended, as indicated in the technical documentation. Vemer S.p.A. reserves the right to make, without prior notice, such changes as may, in its sole discretion, improve the technical and functional characteristics of the products and the related production logic. The technical characteristics and images of the products indicated are given for information only and are not binding in any way, since they may be modified without prior notice.

Sensor 200

VE213500

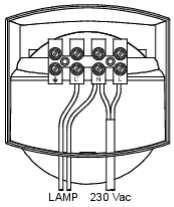



Horizontal rotation 180°



Vertical rotation 45°

Product variants

Sensor 200 Nero

VE787700

Wall-mounted motion sensor, 230 Vac, with infrared technology, 200° operating range and IP 55 protection degree. Colour black

Model variants

SENSOR 200 BLISTER

Packaged in blister packs.

Reference standards

Compliance with Community Directives:

• 2014/35/UE (LVD) • 2014/30/UE (EMCD) • 2011/65/UE e 2015/863/UE (ROHS)

is declared with reference to the following Standards:

• EN 60669-2-1 • EN IEC 63000

Vemer S.p.A. declines all responsibility for the use of the products for purposes other than those for which they are intended, as indicated in the technical documentation. Vemer S.p.A. reserves the right to make, without prior notice, such changes as may, in its sole discretion, improve the technical and functional characteristics of the products and the related production logic. The technical characteristics and images of the products indicated are given for information only and are not binding in any way, since they may be modified without prior notice.