Sensor LED

VE767200



Wall-mounted motion sensor with built-in LED spotlight, 230 Vac power supply, 200° operating range and IP 55 protection degree. Built-in LED illuminates for a settable time when a warm body moves in front of the device. Includes a relay to connect an external device, such as a light or acoustic alarm, activated simultaneously with the light.

General features

- Supplied with a wall-mounted bracket
- LED for lighting
- Trimmer for intervention delay and brightness threshold setting
- Rotatable and tiltable sensor
- Possibility to apply detection area limiters (included)

Technical specifications

Power supply	
Power supply	230 Vac
Frequency	50 Hz
Settings	
Tripping time	3 seconds ÷ 30 minutes
Intervention Brightness Range	5 ÷ 1000 lux
Functional characteristics	
Detection angle	200 °
Sensing range	12 meters (front) 8 meters (lateral)
Light Intensity	1000 lm
Operating conditions	
Operating temperature range	-20 ÷ 40 °C
Relative humidity	10% ÷ 90% non-condensing RH
Connectable loads	
Incandescent lamps	1000 W
Fluorescent lamps (neon)	500 VA
Fluorescent lamps (compensated)	150 VA
Halogen lamps (230 V)	1000 W
Low Consumption Lamps (CLF)	250 VA
LED lamps	125 VA

Vemer S.p.A. declines all responsibility for the use of the products for purposes other than those for which they are intended, as indicated in the technical documentation. Vemer S.p.A. reserves the right to make, without prior notice, such changes as may, in its sole discretion, improve the technical and functional characteristics of the products and the related production logic. The technical characteristics and images of the products indicated are given for information only and are not binding in any way, since they may be modified without prior notice.

Revision date: 2026-02-02

Sensor LED

VE767200

Outputs	
Relay number	1
Relay capacity at 250 Vac	10 A
Mechanical features	
Protection degree	IP55
Physical features	
Color temperature	4000 K
Overall dimensions	
Height (A)	120 mm
Width (B)	175 mm
Depth (C)	175 mm

Dimensions

Front View

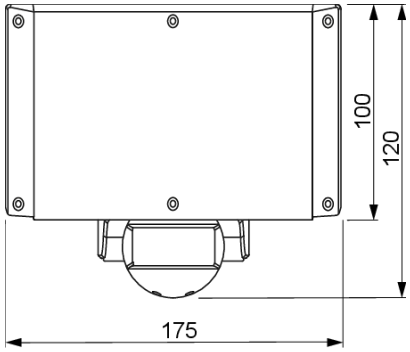

Side View

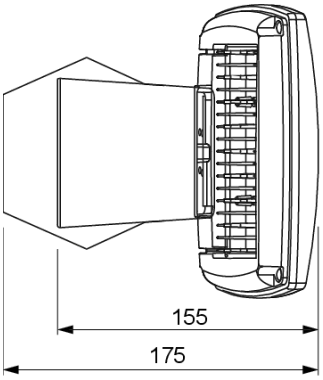

Wiring diagram

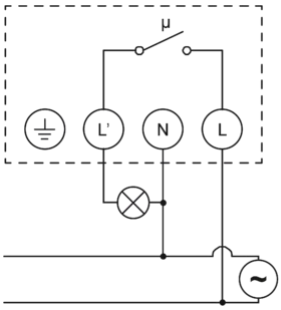

Graphic details

Vemer S.p.A. declines all responsibility for the use of the products for purposes other than those for which they are intended, as indicated in the technical documentation. Vemer S.p.A. reserves the right to make, without prior notice, such changes as may, in its sole discretion, improve the technical and functional characteristics of the products and the related production logic. The technical characteristics and images of the products indicated are given for information only and are not binding in any way, since they may be modified without prior notice.

Sensor LED

VE767200

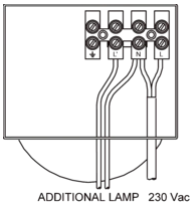



Horizontal rotation 180°



Vertical rotation 45°

Product variants

Sensor 2LED

VE767300

Wall-mounted motion sensor, 230 Vac, with dual LEDs, 200° operating range and IP 55 protection degree

Reference standards

Compliance with Community Directives:

• 2014/35/UE (LVD) • 2014/30/UE (EMCD) • 2011/65/UE e 2015/863/UE (ROHS)

is declared with reference to the following Standards:

• EN 60669-2-1 • EN IEC 63000

Vemer S.p.A. declines all responsibility for the use of the products for purposes other than those for which they are intended, as indicated in the technical documentation. Vemer S.p.A. reserves the right to make, without prior notice, such changes as may, in its sole discretion, improve the technical and functional characteristics of the products and the related production logic. The technical characteristics and images of the products indicated are given for information only and are not binding in any way, since they may be modified without prior notice.

Revision date: 2026-02-02