# Sensor 360

VP403000





Ceiling-mounted motion sensor, 230 Vac, with infrared technology, 360° detection range and IP20 protection rating.

## General features

- Selector for adjusting the brightness level
- Detection range: 3.5 m / 360° (with installation at a height of 2.5 m)
- Ceiling-mounted
- Adjustable operating time: 3 s ÷ 10 min

## Technical specifications

| | |
|---|---|
| **Power supply** | |
| Power supply | 230 Vac |
| Frequency | 50 Hz |
| Absorption | 2 W |
| **Settings** | |
| Tripping time | 3 seconds ÷ 10 minutes |
| **Functional characteristics** | |
| Detection angle | 360 ° |
| Sensing range | 7 metres in diameter at a height of 2.5 metres |
| **Connectable loads** | |
| Incandescent lamps | 1000 W |
| Halogen lamps (230 V) | 1000 W |
| **Mechanical features** | |
| Protection degree | IP20 |
| **Overall dimensions** | |
| Depth (C) | 46 mm |
| **Diameter dimension** | |
| Dimension Ø - A | 138.5 mm |

Vemer S.p.A. declines all responsibility for the use of the products for purposes other than those for which they are intended, as indicated in the technical documentation. Vemer S.p.A. reserves the right to make, without prior notice, such changes as may, in its sole discretion, improve the technical and functional characteristics of the products and the related production logic. The technical characteristics and images of the products indicated are given for information only and are not binding in any way, since they may be modified without prior notice.



Revision date: 2026-02-02

# Sensor 360

VP403000



## Dimensions

Front View




Side View

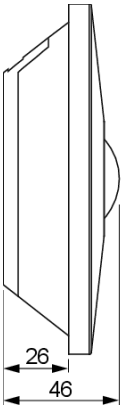


## Wiring diagram

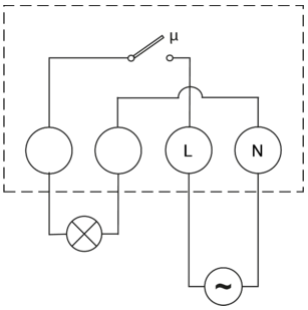


## Reference standards

Compliance with Community Directives:

**• 2014/35/UE (LVD) • 2014/30/UE (EMCD) • 2011/65/UE e 2015/863/UE (ROHS)**

is declared with reference to the following Standards:

**• EN 60669-2-1 • EN IEC 63000**

Vemer S.p.A. declines all responsibility for the use of the products for purposes other than those for which they are intended, as indicated in the technical documentation. Vemer S.p.A. reserves the right to make, without prior notice, such changes as may, in its sole discretion, improve the technical and functional characteristics of the products and the related production logic. The technical characteristics and images of the products indicated are given for information only and are not binding in any way, since they may be modified without prior notice.



Revision date: 2026-02-02