Sensor 360 L

VE787800



Ceiling-mounted motion sensor, 230 Vac, with infrared technology, 360° detection range and IP44 protection rating.

General features

- Trimmer for brightness, sensitivity, and response time adjustment
- Ideal for ceiling-mounted installation, with a maximum mounting height of 12 m (at 12 m it covers a surface with a 17 m diameter).
- Tripping time adjustable between 1 second and 10 minutes
- Blue LED to indicate detection or reception of a remote control signal
- Possibility to apply detection area limiters (included)
- Infrared interface for remote programming via remote control, even with detector already installed (maximum distance 8 m)
- Special operating modes available with remote control:
  - 5h ON: always on for 5 hours
  - VACANCY: simulates the presence of people through random switching on when brightness falls below the selected level
  - ALARM: activates the system with a brief on/off sequence following movement

Technical specifications

Power supply	
Power supply	230 Vac
Frequency	50 Hz
Absorption	8 (1) VA (W)
Settings	
Tripping time	1 second ÷ 10 minutes
Intervention Brightness Range	10 ÷ 1000 lux
Functional characteristics	
Detection angle	360 °
Sensing range	17 meters in diameter at 12 meters high
Operating conditions	
Operating temperature range	-10 ÷ 40 °C
Connectable loads	
Incandescent lamps	2200 W
Fluorescent lamps (neon)	1200 VA
Halogen lamps (low voltage)	2000 VA
Halogen lamps (230 V)	2200 W
Low Consumption Lamps (CLF)	1000 VA

Vemer S.p.A. declines all responsibility for the use of the products for purposes other than those for which they are intended, as indicated in the technical documentation. Vemer S.p.A. reserves the right to make, without prior notice, such changes as may, in its sole discretion, improve the technical and functional characteristics of the products and the related production logic. The technical characteristics and images of the products indicated are given for information only and are not binding in any way, since they may be modified without prior notice.

Revision date: 2026-02-02

Sensor 360 L

VE787800

Connectable loads	
Low consumption lamps (Downlights)	900 VA
LED lamps	500 VA
Mechanical features	
Protection degree	IP44
Overall dimensions	
Depth (C)	68 mm
Diameter dimension	
Dimension Ø - A	140 mm

Dimensions

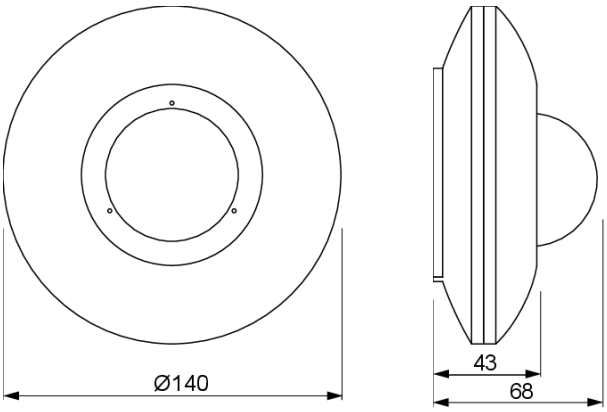

Wiring diagram

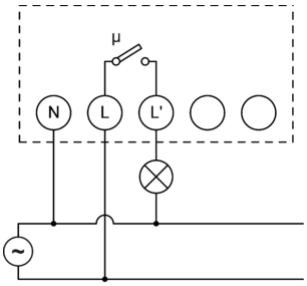

Accessories compatible with the product

TC.Sensor

VE787900

Infrared remote control for
remote configuration

Vemer S.p.A. declines all responsibility for the use of the products for purposes other than those for which they are intended, as indicated in the technical documentation. Vemer S.p.A. reserves the right to make, without prior notice, such changes as may, in its sole discretion, improve the technical and functional characteristics of the products and the related production logic. The technical characteristics and images of the products indicated are given for information only and are not binding in any way, since they may be modified without prior notice.

Reference standards

Compliance with Community Directives:

• 2014/35/UE (LVD) • 2014/30/UE (EMCD) • 2011/65/UE e 2015/863/UE (ROHS)

is declared with reference to the following Standards:

• EN 60669-2-1 • EN IEC 63000

Vemer S.p.A. declines all responsibility for the use of the products for purposes other than those for which they are intended, as indicated in the technical documentation. Vemer S.p.A. reserves the right to make, without prior notice, such changes as may, in its sole discretion, improve the technical and functional characteristics of the products and the related production logic. The technical characteristics and images of the products indicated are given for information only and are not binding in any way, since they may be modified without prior notice.