Sensor CORNER

VE767400



Motion sensor with wall installation and infrared technology, 230 Vac power supply, 200° operating range and IP 55 protection degree. Device detects movement within range and activates an output relay, allowing connection of an external device such as a light or acoustic alarm.

General features

- Trimmer for intervention delay and brightness threshold setting
- Tilting sensor
- Adapter for corner-mounted installation (internal and external)

Technical specifications

Power supply	
Power supply	230 Vac
Frequency	50 Hz
Settings	
Tripping time	3 seconds ÷ 30 minutes
Intervention Brightness Range	5 ÷ 2000 lux
Functional characteristics	
Detection angle	200 °
Sensing range	12 meters (front) 8 meters (lateral)
Operating conditions	
Operating temperature range	-20 ÷ 40 °C
Relative humidity	10% ÷ 90% non-condensing RH
Connectable loads	
Incandescent lamps	1000 W
Fluorescent lamps (neon)	500 W
Fluorescent lamps (compensated)	250 W
Halogen lamps (low voltage)	200 W
Halogen lamps (230 V)	1000 W
Low Consumption Lamps (CLF)	500 VA
LED lamps	150 W

Vemer S.p.A. declines all responsibility for the use of the products for purposes other than those for which they are intended, as indicated in the technical documentation. Vemer S.p.A. reserves the right to make, without prior notice, such changes as may, in its sole discretion, improve the technical and functional characteristics of the products and the related production logic. The technical characteristics and images of the products indicated are given for information only and are not binding in any way, since they may be modified without prior notice.

Revision date: 2026-02-02

Sensor CORNER

VE767400

Outputs	
Relay capacity at 250 Vac	10 A
Mechanical features	
Protection degree	IP55
Overall dimensions	
Depth (C)	120 mm
Diameter dimension	
Dimension Ø - A	96 mm

Dimensions

Front View

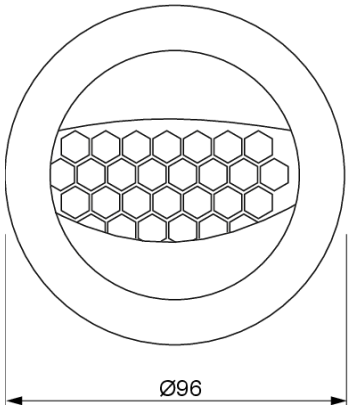

Side View

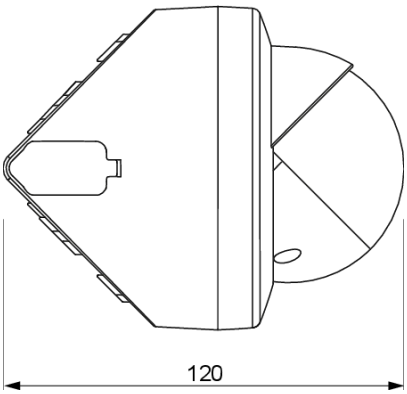

Wiring diagram

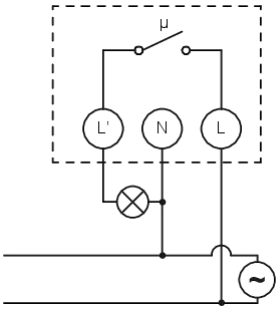

Graphic details

Vemer S.p.A. declines all responsibility for the use of the products for purposes other than those for which they are intended, as indicated in the technical documentation. Vemer S.p.A. reserves the right to make, without prior notice, such changes as may, in its sole discretion, improve the technical and functional characteristics of the products and the related production logic. The technical characteristics and images of the products indicated are given for information only and are not binding in any way, since they may be modified without prior notice.

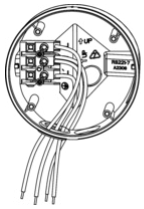

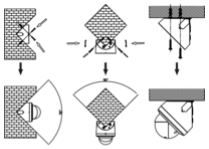

Reference standards

Compliance with Community Directives:

• 2014/35/UE (LVD) • 2014/30/UE (EMCD) • 2011/65/UE e 2015/863/UE (ROHS)

is declared with reference to the following Standards:

• EN 60669-2-1 • EN IEC 63000

Vemer S.p.A. declines all responsibility for the use of the products for purposes other than those for which they are intended, as indicated in the technical documentation. Vemer S.p.A. reserves the right to make, without prior notice, such changes as may, in its sole discretion, improve the technical and functional characteristics of the products and the related production logic. The technical characteristics and images of the products indicated are given for information only and are not binding in any way, since they may be modified without prior notice.