HMS-110

VP758700



[Model variant]

Panel-mounted hour meter, 110 Vac power supply, 55×55 mm. Connected to the ends of solenoid valves and internal resistors of electrical appliances and machines, it allows consumption and activity hours to be recorded.

General features

- No. of digits: 5 + 2 decimals
- Connection via screw terminals or 6.3 mm fastons
- Protection degree: IP40

Technical specifications

Power supply	
Power supply	110 Vac (-10% ÷ +10%)
Frequency	50 Hz
Absorption	8 mA
Measure	
Meter display resolution	1/100 h
Maximum count	99999.99 h
Operating conditions	
Operating temperature range	-25 ÷ 80 °C
Relative humidity	max. 80 % at 25 °C RH
Storage temperature range	-40 ÷ 80 °C
Viewing	
Features of electromechanical counter	5 + 2 digits
Digits number	7
Digits size	4 mm
Viewing	Electromechanical counter
Mechanical features	
Protection degree	IP40
Overall dimensions	
Height (A)	55 mm

Vemer S.p.A. declines all responsibility for the use of the products for purposes other than those for which they are intended, as indicated in the technical documentation. Vemer S.p.A. reserves the right to make, without prior notice, such changes as may, in its sole discretion, improve the technical and functional characteristics of the products and the related production logic. The technical characteristics and images of the products indicated are given for information only and are not binding in any way, since they may be modified without prior notice.

Revision date: 2026-02-02

HMS-110

VP758700

Overall dimensions	
Width (B)	55 mm
Depth (C)	38 mm

Dimensions

Front View

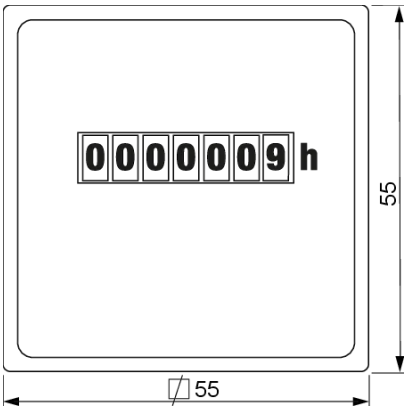

Side View

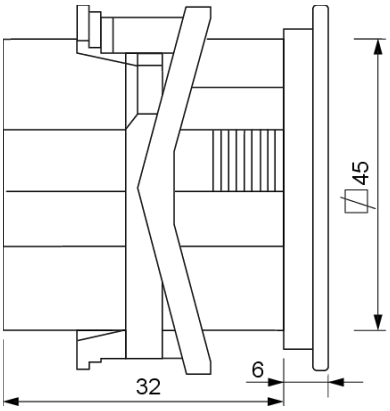

Rear View

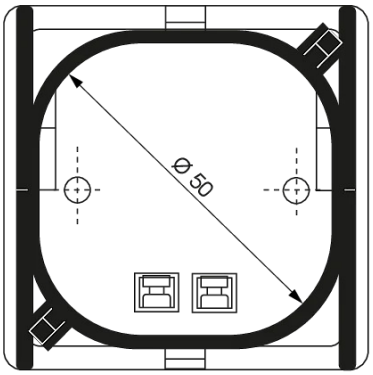

Drilling-template

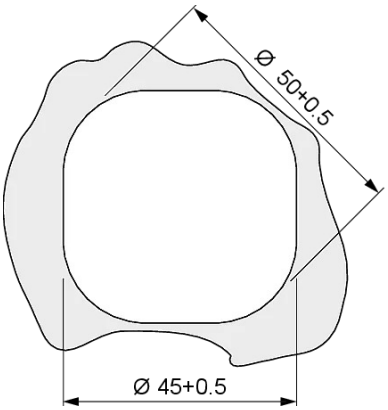

Product variants

HMS-110 60 Hz

VE568200

Hour meter

Reference standards

Compliance with Community Directives:

• 2014/35/UE (LVD) • 2014/30/UE (EMCD) • 2011/65/UE e 2015/863/UE (ROHS)

is declared with reference to the following Standards:

• EN IEC 61000-6-2 • EN IEC 61000-6-3 • EN 61010-1 • EN IEC 63000

Vemer S.p.A. declines all responsibility for the use of the products for purposes other than those for which they are intended, as indicated in the technical documentation. Vemer S.p.A. reserves the right to make, without prior notice, such changes as may, in its sole discretion, improve the technical and functional characteristics of the products and the related production logic. The technical characteristics and images of the products indicated are given for information only and are not binding in any way, since they may be modified without prior notice.

Revision date: 2026-02-02