HM30-024

VE162400



[Model variant]

Panel-mounted hour meter, 24 Vac power supply, 36×24 mm. Connected to the ends of solenoid valves and internal resistors of electrical appliances and machines, it allows consumption and activity hours to be recorded.

General features

- No. of digits: 5 + 2 decimals
- Connection via screw terminals or 6.3 mm fastons
- Protection degree: IP40

Technical specifications

Power supply	
Power supply	24 Vac (-10% ÷ +10%)
Frequency	50 Hz
Absorption	8 mA
Measure	
Meter display resolution	1/100 h
Maximum count	99999.99 h
Operating conditions	
Operating temperature range	-25 ÷ 70 °C
Relative humidity	max. 80 % at 25 °C RH
Storage temperature range	-40 ÷ 80 °C
Viewing	
Features of electromechanical counter	5 + 2 digits
Digits number	7
Digits size	4 mm
Viewing	Electromechanical counter
Mechanical features	
Protection degree	IP40
Overall dimensions	
Height (A)	24 mm
Width (B)	36 mm
Depth (C)	59 mm

Vemer S.p.A. declines all responsibility for the use of the products for purposes other than those for which they are intended, as indicated in the technical documentation. Vemer S.p.A. reserves the right to make, without prior notice, such changes as may, in its sole discretion, improve the technical and functional characteristics of the products and the related production logic. The technical characteristics and images of the products indicated are given for information only and are not binding in any way, since they may be modified without prior notice.

Revision date: 2026-02-02

Dimensions

Front View

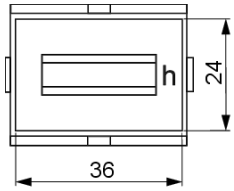

Side View

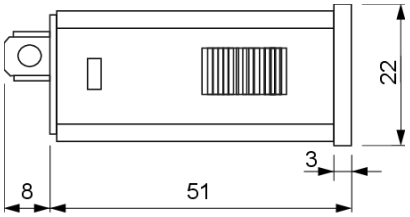

Drilling-template

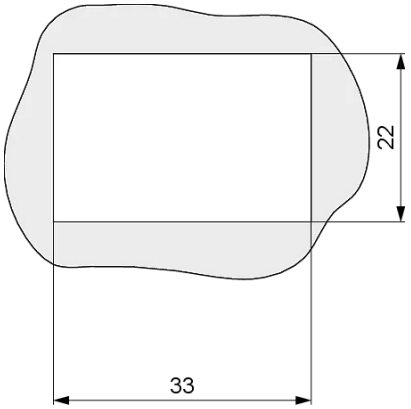

Accessories compatible with the product

HMAD

VE466900

Adapter for hour meter from 36x24 mm to 48x24 mm

Reference standards

Compliance with Community Directives:

• 2014/35/UE (LVD) • 2014/30/UE (EMCD) • 2011/65/UE e 2015/863/UE (ROHS)

is declared with reference to the following Standards:

• EN IEC 61000-6-2 • EN IEC 61000-6-3 • EN 61010-1 • EN IEC 63000

Vemer S.p.A. declines all responsibility for the use of the products for purposes other than those for which they are intended, as indicated in the technical documentation. Vemer S.p.A. reserves the right to make, without prior notice, such changes as may, in its sole discretion, improve the technical and functional characteristics of the products and the related production logic. The technical characteristics and images of the products indicated are given for information only and are not binding in any way, since they may be modified without prior notice.