# HMS-1080

VP760300






**[Model variant]**

Panel-mounted hour meter, 10 ÷ 80 Vdc power supply, 55×55 mm. Connected to the ends of solenoid valves and internal resistors of electrical appliances and machines, it allows consumption and activity hours to be recorded.

## General features

- No. of digits: 6 + 1 decimal
- Connection via screw terminals or 6.3 mm fastons
- Protection degree: IP40

## Technical specifications

| | |
|---|---|
| **Power supply** | |
| Power supply | 10 ÷ 80 Vdc (-10% ÷ +10%) |
| Absorption | 9 mA |
| **Measure** | |
| Meter display resolution | 1/10 h |
| Maximum count | 999999.9 h |
| **Operating conditions** | |
| Operating temperature range | -20 ÷ 70 °C |
| Relative humidity | max. 80 % at 25 °C RH |
| Storage temperature range | -20 ÷ 70 °C |
| **Viewing** | |
| Features of electromechanical counter | 6 + 1 digits |
| Digits number | 7 |
| Digits size | 4 mm |
| Viewing | Electromechanical counter |
| **Mechanical features** | |
| Protection degree | IP40 |
| **Overall dimensions** | |
| Height (A) | 55 mm |
| Width (B) | 55 mm |

Vemer S.p.A. declines all responsibility for the use of the products for purposes other than those for which they are intended, as indicated in the technical documentation. Vemer S.p.A. reserves the right to make, without prior notice, such changes as may, in its sole discretion, improve the technical and functional characteristics of the products and the related production logic. The technical characteristics and images of the products indicated are given for information only and are not binding in any way, since they may be modified without prior notice.



Revision date: 2026-02-02

# HMS-1080

VP760300



| Overall dimensions | |
|---|---|
| Depth (C) | 38 mm |

## Dimensions

Front View

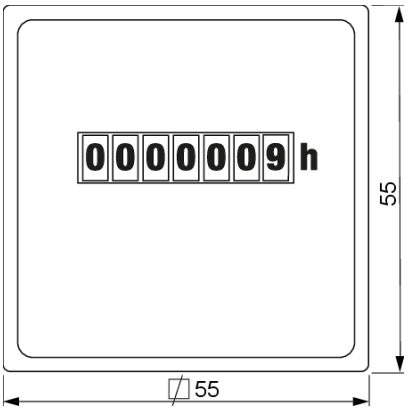


Side View

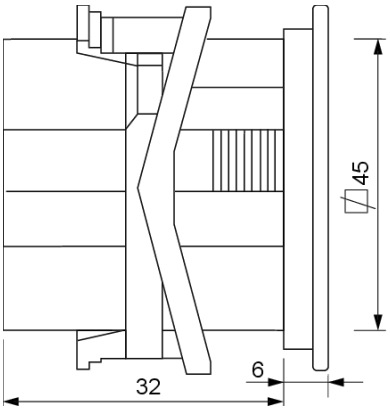


Rear View

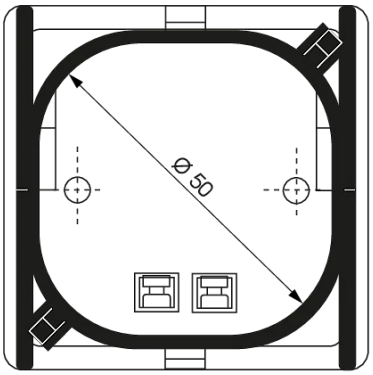


Drilling-template

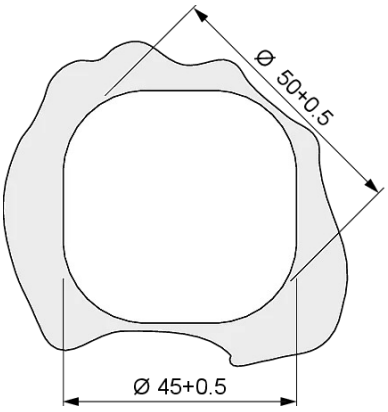


## Reference standards

Compliance with Community Directives:

**• 2014/35/UE (LVD) • 2014/30/UE (EMCD) • 2011/65/UE e 2015/863/UE (ROHS)**

is declared with reference to the following Standards:

**• EN IEC 61000-6-2 • EN IEC 61000-6-3 • EN 61010-1 • EN IEC 63000**

Vemer S.p.A. declines all responsibility for the use of the products for purposes other than those for which they are intended, as indicated in the technical documentation. Vemer S.p.A. reserves the right to make, without prior notice, such changes as may, in its sole discretion, improve the technical and functional characteristics of the products and the related production logic. The technical characteristics and images of the products indicated are given for information only and are not binding in any way, since they may be modified without prior notice.



Revision date: 2026-02-02