HMC-1080

VP761100



[Model variant]

Panel-mounted hour meter, 10 ÷ 80 Vdc power supply, Ø58 mm. Connected to the ends of solenoid valves and internal resistors of electrical appliances and machines, it allows consumption and activity hours to be recorded.

General features

- No. of digits: 6 + 1 decimal
- Connection via 6.3 mm faston terminals
- Degree of protection: IP65

Technical specifications

Power supply	
Power supply	10 ÷ 80 Vdc (-10% ÷ +10%)
Absorption	9 mA
Measure	
Meter display resolution	1/10 h
Maximum count	999999.9 h
Operating conditions	
Operating temperature range	-20 ÷ 70 °C
Relative humidity	max. 80 % at 25 °C RH
Storage temperature range	-20 ÷ 70 °C
Viewing	
Features of electromechanical counter	6 + 1 digits
Digits number	7
Digits size	4 mm
Viewing	Electromechanical counter
Mechanical features	
Protection degree	IP67
Overall dimensions	
Depth (C)	56 mm
Diameter dimension	
Dimension Ø - A	58 mm

Vemer S.p.A. declines all responsibility for the use of the products for purposes other than those for which they are intended, as indicated in the technical documentation. Vemer S.p.A. reserves the right to make, without prior notice, such changes as may, in its sole discretion, improve the technical and functional characteristics of the products and the related production logic. The technical characteristics and images of the products indicated are given for information only and are not binding in any way, since they may be modified without prior notice.

Revision date: 2026-02-02

HMC-1080

VP761100

Dimensions

Front View

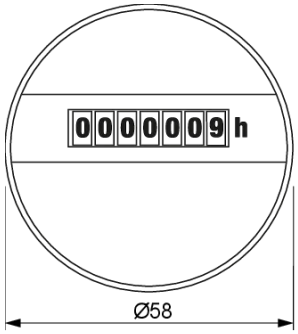

Side View

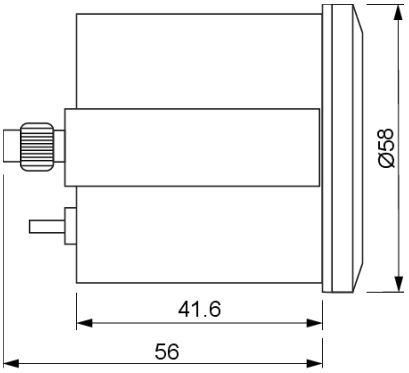

Rear View

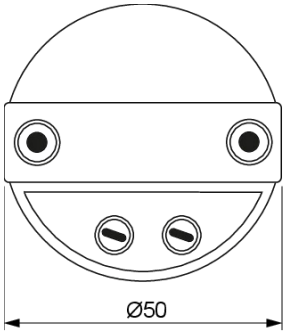

Drilling-template

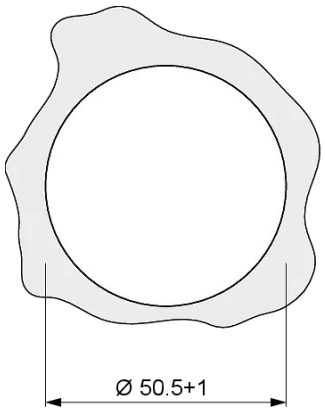

Accessories compatible with the product

KAS

VP762900

Anti-shock kit for HMC model

Reference standards

Compliance with Community Directives:

• 2014/35/UE (LVD) • 2014/30/UE (EMCD) • 2011/65/UE e 2015/863/UE (ROHS)

is declared with reference to the following Standards:

• EN IEC 61000-6-2 • EN IEC 61000-6-3 • EN 61010-1 • EN IEC 63000

Vemer S.p.A. declines all responsibility for the use of the products for purposes other than those for which they are intended, as indicated in the technical documentation. Vemer S.p.A. reserves the right to make, without prior notice, such changes as may, in its sole discretion, improve the technical and functional characteristics of the products and the related production logic. The technical characteristics and images of the products indicated are given for information only and are not binding in any way, since they may be modified without prior notice.

Revision date: 2026-02-02