KAS

VP762900



Anti-shock kit to be combined with the hour meter to prevent vibrations.

General features

- Anti-vibration accessory for hour meter, round shape Ø 58 mm, model RTR
- Useful when the hour meter is used on equipment or machines subject to strong vibrations.
- Consisting of: 1 rubber ring, 2 plastic rings and 1 metal bracket

Technical specifications

Diameter dimension	
Dimension Ø - A	80 mm
Dimension Ø - B	58 mm

Vemer S.p.A. declines all responsibility for the use of the products for purposes other than those for which they are intended, as indicated in the technical documentation. Vemer S.p.A. reserves the right to make, without prior notice, such changes as may, in its sole discretion, improve the technical and functional characteristics of the products and the related production logic. The technical characteristics and images of the products indicated are given for information only and are not binding in any way, since they may be modified without prior notice.

Revision date: 2026-02-02

Dimensions

Front View

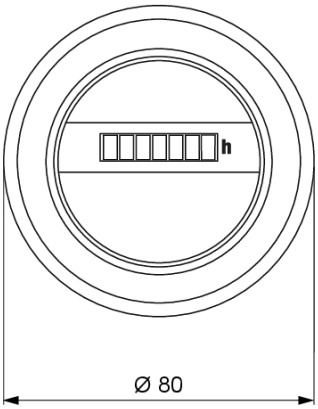

Side View

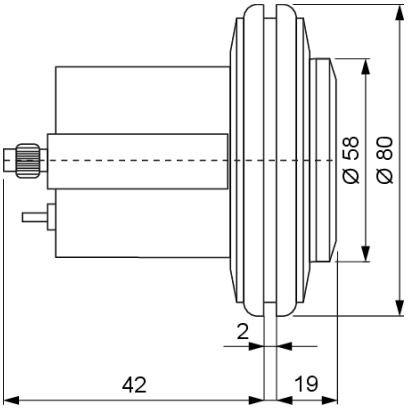

Rear View

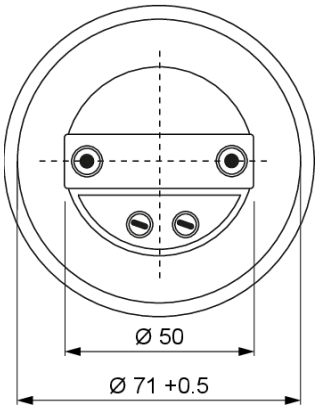

Drilling-template

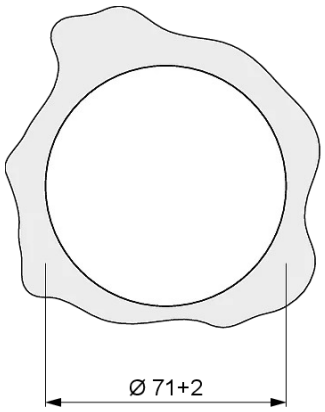

Vemer S.p.A. declines all responsibility for the use of the products for purposes other than those for which they are intended, as indicated in the technical documentation. Vemer S.p.A. reserves the right to make, without prior notice, such changes as may, in its sole discretion, improve the technical and functional characteristics of the products and the related production logic. The technical characteristics and images of the products indicated are given for information only and are not binding in any way, since they may be modified without prior notice.