# VALV-12NA 230 Vac

VN074100





Solenoid valves (with brass body) for normally open gas shut-off that close when the coil is energized. Manual reset allows the causes of the gas shut-off to be checked. During normal operation there is no electrical absorption and therefore, in addition to energy saving, no parts are subjected to wear; buzzing and vibrations are also avoided.

## General features

- Normally open manual reset gas solenoid valves that can be combined with a gas detector
- For passive safety (triggered only by detector command)
- Threaded connections UNI-ISO 7/1

## Technical specifications

| | |
|---|---|
| **Power supply** | |
| Power supply | 230 Vac (-15% ÷ +10%) |
| Frequency | 50 Hz |
| Absorption | 7 VA |
| **Functional characteristics** | |
| Valve type | Normally Open |
| **Operating conditions** | |
| Operating temperature range | - 10 ÷ 60 °C |
| Maximum inlet pressure | 500 mbar |
| **Mechanical features** | |
| Protection degree | IP65 |
| **Overall dimensions** | |
| Height (A) | 107 mm |
| Width (B) | 66 mm |
| **Dimensions** | |
| Connection | Rp 1/2" |

Vemer S.p.A. declines all responsibility for the use of the products for purposes other than those for which they are intended, as indicated in the technical documentation. Vemer S.p.A. reserves the right to make, without prior notice, such changes as may, in its sole discretion, improve the technical and functional characteristics of the products and the related production logic. The technical characteristics and images of the products indicated are given for information only and are not binding in any way, since they may be modified without prior notice.



Revision date: 2026-02-02

# VALV-12NA 230 Vac

VN074100



## Dimensions

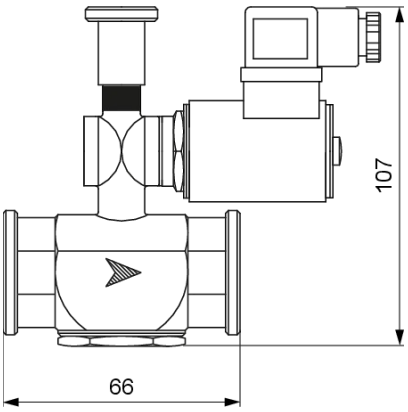


## Product variants

### VALV-34NA 230 Vac

VN073300

Normally open solenoid valve with Rp 3/4" connection 230 Vac power supply

### VALV-01NA 230 Vac

VN075800

Normally open solenoid valve with Rp 1" connection 230 Vac power supply

## Model variants

### VALV-NA 12

Normally open gas solenoid valve with manual reset.

## Product set

### Set-I MET12

VE315800

Configured set consisting of IRM detector and normally closed solenoid valve with 1/2" connection

### Set-I GPL12

VE317400

Configured set consisting of IRG detector and normally closed solenoid valve with 1/2" connection

### Set-W MET12

VN790200

Configured set consisting of RGM Wave and normally closed solenoid valve with 1/2" connection

### Set-W GPL12

VN792800

Configured set consisting of RGG Wave and normally closed solenoid valve with 1/2" connection

## Reference standards

Compliance with Community Directives:

**• 2014/35/UE (LVD) • 2014/30/UE (EMCD) • 2011/65/UE e 2015/863/UE (ROHS)**

is declared with reference to the following Standards:

**• EN 60730-1 • EN IEC 61000-6-1 • EN IEC 61000-6-3 • EN IEC 63000**

Vemer S.p.A. declines all responsibility for the use of the products for purposes other than those for which they are intended, as indicated in the technical documentation. Vemer S.p.A. reserves the right to make, without prior notice, such changes as may, in its sole discretion, improve the technical and functional characteristics of the products and the related production logic. The technical characteristics and images of the products indicated are given for information only and are not binding in any way, since they may be modified without prior notice.



Revision date: 2026-02-02