VALV-01NA 230 Vac

VN075800



Solenoid valves (with brass body) for normally open gas shut-off that close when the coil is energized. Manual reset allows the causes of the gas shut-off to be checked. During normal operation there is no electrical absorption and therefore, in addition to energy saving, no parts are subjected to wear; buzzing and vibrations are also avoided.

General features

- Normally open manual reset gas solenoid valves that can be combined with a gas detector
- For passive safety (triggered only by detector command)
- Threaded connections UNI-ISO 7/1

Technical specifications

Power supply	
Power supply	230 Vac (-15% ÷ +10%)
Frequency	50 Hz
Absorption	8 VA
Functional characteristics	
Valve type	Normally Open
Operating conditions	
Operating temperature range	- 10 ÷ 60 °C
Maximum inlet pressure	500 mbar
Mechanical features	
Protection degree	IP65
Overall dimensions	
Height (A)	118 mm
Width (B)	82 mm
Dimensions	
Connection	Rp 1"

Vemer S.p.A. declines all responsibility for the use of the products for purposes other than those for which they are intended, as indicated in the technical documentation. Vemer S.p.A. reserves the right to make, without prior notice, such changes as may, in its sole discretion, improve the technical and functional characteristics of the products and the related production logic. The technical characteristics and images of the products indicated are given for information only and are not binding in any way, since they may be modified without prior notice.

Revision date: 2026-02-02

VALV-01NA 230 Vac

VN075800

Dimensions

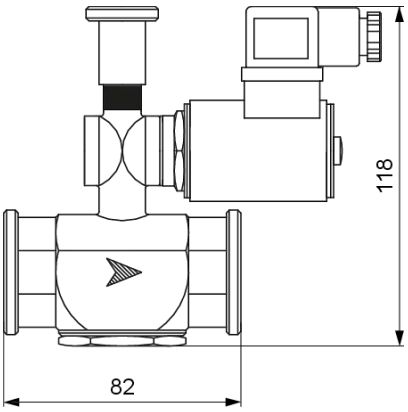

Product variants

VALV-12NA 230 Vac

VN074100

Normally open solenoid valve with Rp 1/2" connection 230 Vac power supply

VALV-34NA 230 Vac

VN073300

Normally open solenoid valve with Rp 3/4" connection 230 Vac power supply

Model variants

VALV-NA 12

Normally open gas solenoid valve with manual reset.

Reference standards

Compliance with Community Directives:

• 2014/35/UE (LVD) • 2014/30/UE (EMCD) • 2011/65/UE e 2015/863/UE (ROHS)

is declared with reference to the following Standards:

• EN 60730-1 • EN IEC 61000-6-1 • EN IEC 61000-6-3 • EN IEC 63000

Vemer S.p.A. declines all responsibility for the use of the products for purposes other than those for which they are intended, as indicated in the technical documentation. Vemer S.p.A. reserves the right to make, without prior notice, such changes as may, in its sole discretion, improve the technical and functional characteristics of the products and the related production logic. The technical characteristics and images of the products indicated are given for information only and are not binding in any way, since they may be modified without prior notice.