# ZZ 230

VE732400






Intermittent buzzer, 1-DIN module, for civil and industrial installation.

## General features

- Device type: D (sound emission has the same duration as the control operation)
- Intermittent operation 15/60: sound emission up to 15 seconds, followed by a 60-second pause
- Sound level (at 60 cm): – 70 dBA for buzzers – 80 dBA for chimes
- Terminal block for cables with a maximum cross-section of 4 mm2

## Technical specifications

| | |
|---|---|
| **Power supply** | |
| Power supply | 230 Vac |
| Frequency | 50 / 60 Hz |
| Absorption | 6 VA |
| **Functional characteristics** | |
| Acoustic signalling | 70 dB (at 60 cm) |
| **Terminations** | |
| Maximum cable cross-section | 4 mm² |
| **Physical features** | |
| Color | White |
| **Overall dimensions** | |
| Height (A) | 87.5 mm |
| Width (B) | 18 mm |
| Depth (C) | 60 mm |

Vemer S.p.A. declines all responsibility for the use of the products for purposes other than those for which they are intended, as indicated in the technical documentation. Vemer S.p.A. reserves the right to make, without prior notice, such changes as may, in its sole discretion, improve the technical and functional characteristics of the products and the related production logic. The technical characteristics and images of the products indicated are given for information only and are not binding in any way, since they may be modified without prior notice.



Revision date: 2026-02-02

## Dimensions

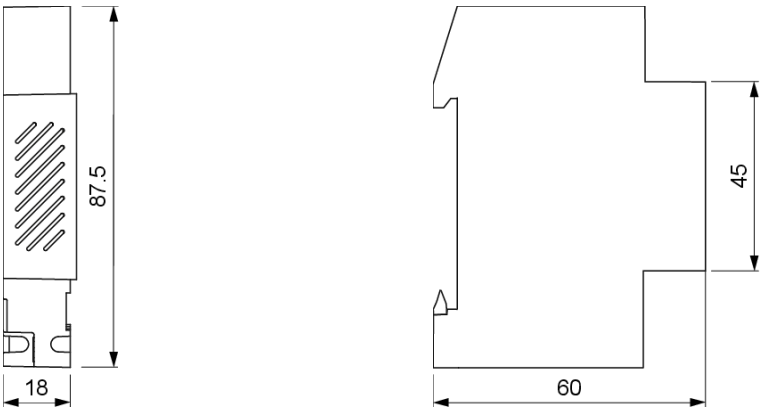


## Model variants

### ZZ-12

Intermittent-duty buzzer suitable for DIN-rail mount installation (1 module).

## Reference standards

Compliance with Community Directives:

**• 2014/35/UE (LVD) • 2014/30/UE (EMCD) • 2011/65/UE e 2015/863/UE (ROHS)**

is declared with reference to the following Standards:

**• EN 62080 • EN IEC 61000-6-1 • EN IEC 61000-6-3 • EN IEC 63000**


Vemer S.p.A. declines all responsibility for the use of the products for purposes other than those for which they are intended, as indicated in the technical documentation. Vemer S.p.A. reserves the right to make, without prior notice, such changes as may, in its sole discretion, improve the technical and functional characteristics of the products and the related production logic. The technical characteristics and images of the products indicated are given for information only and are not binding in any way, since they may be modified without prior notice.