DR 230

VE734000



Intermittent-use bell, 1 DIN size, suitable for civil and industrial installations.

General features

- Device type: D (sound emission has the same duration as the control operation)
- Intermittent operation 15/60: sound emission up to 15 seconds, followed by a 60-second pause
- Sound level (at 60 cm): – 70 dBA for buzzers – 80 dBA for chimes
- Terminal block for cables with a maximum cross-section of 4 mm2

Technical specifications

Power supply	
Power supply	230 Vac
Frequency	50 / 60 Hz
Absorption	6 VA
Functional characteristics	
Acoustic signalling	80 dB (at 60 cm)
Terminations	
Maximum cable cross-section	4 mm²
Physical features	
Color	White
Overall dimensions	
Height (A)	87.5 mm
Width (B)	18 mm
Depth (C)	60 mm

Vemer S.p.A. declines all responsibility for the use of the products for purposes other than those for which they are intended, as indicated in the technical documentation. Vemer S.p.A. reserves the right to make, without prior notice, such changes as may, in its sole discretion, improve the technical and functional characteristics of the products and the related production logic. The technical characteristics and images of the products indicated are given for information only and are not binding in any way, since they may be modified without prior notice.

Revision date: 2026-02-02

Dimensions

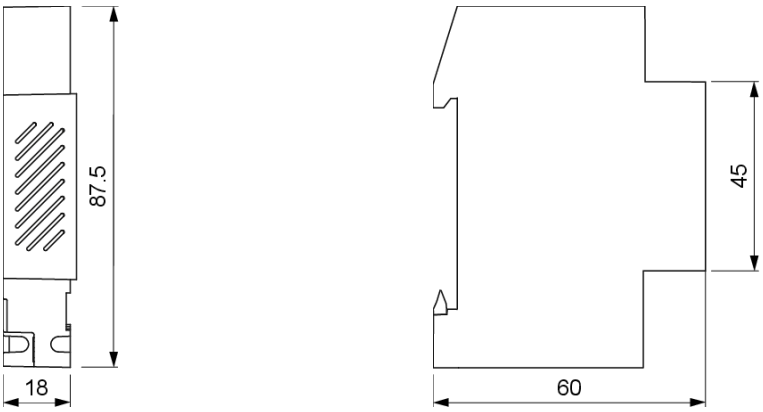

Model variants

DR-12

DIN-rail mounted bell for intermittent use (1 module).

Reference standards

Compliance with Community Directives:

• 2014/35/UE (LVD) • 2014/30/UE (EMCD) • 2011/65/UE e 2015/863/UE (ROHS)

is declared with reference to the following Standards:

• EN 62080 • EN IEC 61000-6-1 • EN IEC 61000-6-3 • EN IEC 63000

Vemer S.p.A. declines all responsibility for the use of the products for purposes other than those for which they are intended, as indicated in the technical documentation. Vemer S.p.A. reserves the right to make, without prior notice, such changes as may, in its sole discretion, improve the technical and functional characteristics of the products and the related production logic. The technical characteristics and images of the products indicated are given for information only and are not binding in any way, since they may be modified without prior notice.