EVA-R 10A AC

VM324100



Ammeter available for AC voltage measurement. With panel installation (72x72 mm), 230 Vac power supply, 10 A AC range, 10 mA resolution.

General features

- Readout: 14 mm red 3-digit display
- Minimum measurable value: 3% of full scale
- Out-of-scale value indication (“HHH”)

Technical specifications

Power supply	
Power supply	230 Vac (-15% ÷ +10%)
Frequency	50 / 60 Hz
Absorption	5 VA
Measure	
Current display resolution	10 mA
Current measurement accuracy	± 0.5 % of full scale value ± 1 digit
AC current range	10 A
Type of insertion - current	Direct
Minimum measurable value	3% of full scale
Operating conditions	
Operating temperature range	-10 ÷ 50 °C
Relative humidity	20% ÷ 90% non-condensing RH
Storage temperature range	-25 ÷ 70 °C
Insulation class	II
Viewing	
Display	Red LEDs
Digits number	3
Digits size	14 mm
Viewing	Max 999

Vemer S.p.A. declines all responsibility for the use of the products for purposes other than those for which they are intended, as indicated in the technical documentation. Vemer S.p.A. reserves the right to make, without prior notice, such changes as may, in its sole discretion, improve the technical and functional characteristics of the products and the related production logic. The technical characteristics and images of the products indicated are given for information only and are not binding in any way, since they may be modified without prior notice.

Revision date: 2026-02-02

EVA-R 10A AC

VM324100

Terminations	
Termination type	Plug-in terminal block
Maximum cable cross-section	2.5 mm²
Mechanical features	
Protection degree	IP40
Overall dimensions	
Height (A)	72 mm
Width (B)	72 mm
Depth (C)	89 mm

Dimensions

Front View

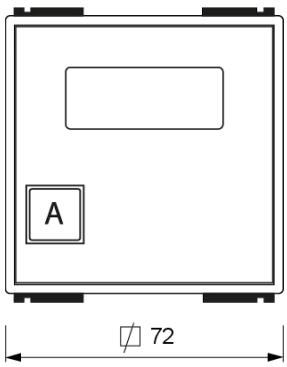

Side View

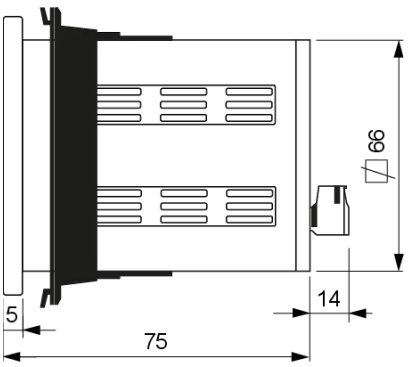

Wiring diagram

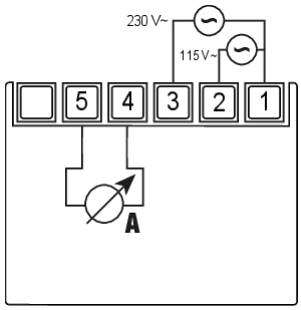

Product variants

EVA-R 1A AC

VM323300

Panel-mounted ammeter, 1 A AC range, 115/230 Vac supply

EVA-R 1A DC

VM320900

Panel-mounted ammeter, 1 A DC range, 115/230 Vac supply

EVA-R 10A DC

VM321700

Panel-mounted ammeter, 10 A DC range, 115/230 Vac supply

Vemer S.p.A. declines all responsibility for the use of the products for purposes other than those for which they are intended, as indicated in the technical documentation. Vemer S.p.A. reserves the right to make, without prior notice, such changes as may, in its sole discretion, improve the technical and functional characteristics of the products and the related production logic. The technical characteristics and images of the products indicated are given for information only and are not binding in any way, since they may be modified without prior notice.

Reference standards

Compliance with Community Directives:

• 2014/35/UE (LVD) • 2014/30/UE (EMCD) • 2011/65/UE e 2015/863/UE (ROHS)

is declared with reference to the following Standards:

• EN 61010-1 • EN IEC 61000-6-2 • EN IEC 61000-6-3 • EN IEC 63000

Vemer S.p.A. declines all responsibility for the use of the products for purposes other than those for which they are intended, as indicated in the technical documentation. Vemer S.p.A. reserves the right to make, without prior notice, such changes as may, in its sole discretion, improve the technical and functional characteristics of the products and the related production logic. The technical characteristics and images of the products indicated are given for information only and are not binding in any way, since they may be modified without prior notice.