EVV-R 1V DC

VM295300



Voltmeter suitable for measuring DC voltage. With panel installation (72x72 mm), 115/230 Vac power supply, 1 Vdc range, 1 mV resolution.

General features

- Readout: 14 mm red 3-digit display
- Minimum measurable value: 3% of full scale
- Out-of-scale value indication (“HHH”)

Technical specifications

Power supply	
Power supply	115 / 230 Vac (-15% ÷ +10%)
Frequency	50 / 60 Hz
Absorption	5 VA
Measure	
Voltage display resolution	1 mV
Voltage measurement accuracy	± 0.5 % of full scale value ± 1 digit
DC voltage range	1 V
Type of insertion - voltage	Direct
Minimum measurable value	3% of full scale
Operating conditions	
Operating temperature range	-10 ÷ 50 °C
Storage temperature range	-25 ÷ 70 °C
Viewing	
Display	Red LEDs
Digits number	3
Digits size	14 mm
Viewing	Max 999
Terminations	
Termination type	Plug-in terminal block

Vemer S.p.A. declines all responsibility for the use of the products for purposes other than those for which they are intended, as indicated in the technical documentation. Vemer S.p.A. reserves the right to make, without prior notice, such changes as may, in its sole discretion, improve the technical and functional characteristics of the products and the related production logic. The technical characteristics and images of the products indicated are given for information only and are not binding in any way, since they may be modified without prior notice.

Revision date: 2026-02-02

Terminations	
Maximum cable cross-section	2.5 mm²
Mechanical features	
Protection degree	IP40
Overall dimensions	
Height (A)	72 mm
Width (B)	72 mm
Depth (C)	89 mm

Dimensions

Front View

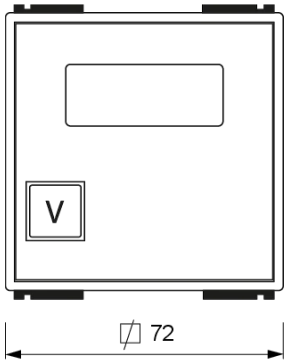

Side View

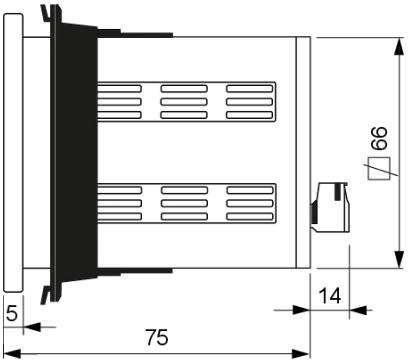

Wiring diagram

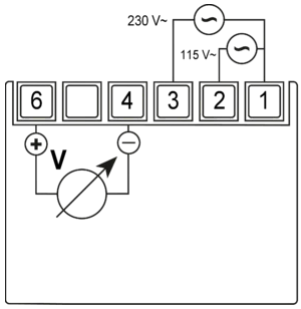

Product variants

EVV-R 10V DC

VM296100

Panel-mounted voltmeter, range 10 Vdc at 115/230 Vac

EVV-R 100V DC

VM297900

Panel-mounted voltmeter, range 100 Vdc at 115/230 Vac

EVV-R 600V DC

VM298700

Panel-mounted voltmeter, range 600 Vdc at 115/230 Vac

Vemer S.p.A. declines all responsibility for the use of the products for purposes other than those for which they are intended, as indicated in the technical documentation. Vemer S.p.A. reserves the right to make, without prior notice, such changes as may, in its sole discretion, improve the technical and functional characteristics of the products and the related production logic. The technical characteristics and images of the products indicated are given for information only and are not binding in any way, since they may be modified without prior notice.

Reference standards

Compliance with Community Directives:

• 2014/35/UE (LVD) • 2014/30/UE (EMCD) • 2011/65/UE e 2015/863/UE (ROHS)

is declared with reference to the following Standards:

• EN 61010-1 • EN IEC 61000-6-2 • EN IEC 61000-6-3 • EN IEC 63000

Vemer S.p.A. declines all responsibility for the use of the products for purposes other than those for which they are intended, as indicated in the technical documentation. Vemer S.p.A. reserves the right to make, without prior notice, such changes as may, in its sole discretion, improve the technical and functional characteristics of the products and the related production logic. The technical characteristics and images of the products indicated are given for information only and are not binding in any way, since they may be modified without prior notice.