EVR-R 115÷230V AC

VM332400



Multi-function AC device for maximum or minimum monitoring: the same device can be used as a multiscale voltmeter or ammeter with a relay output dependent on the measured value with respect to a programmable maximum or minimum intervention threshold. With panel installation (72x72 mm), 115 ÷ 230 Vac power supply.

General features

- Readout: 14 mm red 3-digit display
- Possibility to vary the ammeter range via the menu
- Relay status indication LED
- Led unit indication
- Output: one relay with SPDT contact, 10 A / 250 Vac
- Alarm set-point, differential and switching delay setting
- Possibility to store alarm events
- Direct connection voltmeter up to 600 Vac
- Ammeter with amperometric connection via CT x/5A
- Selectable transformation ratios (for CT x/5 A):
  - all multiples of 5 between 5 and 995
  - all multiples of 50 between 1000 and 8000
- Minimum measurable value: 3% of full scale
- Out-of-scale value indication (“HHH”)

Technical specifications

Power supply	
Power supply	115 ÷ 230 Vac (-15% ÷ +10%)
Frequency	50 / 60 Hz
Absorption	4 (2) VA (W) (at 115 Vac) 6 (2) VA (W) (at 230 Vac)
Parameter settings	
Switching delay	0 ÷ 60 seconds
Measure	
Current measurement accuracy	± 0.5 % of full scale value ± 1 digit
Voltage measurement accuracy	± 0.5 % of full scale value ± 1 digit
AC current range	5–8,000 A
AC voltage range	600 V

Vemer S.p.A. declines all responsibility for the use of the products for purposes other than those for which they are intended, as indicated in the technical documentation. Vemer S.p.A. reserves the right to make, without prior notice, such changes as may, in its sole discretion, improve the technical and functional characteristics of the products and the related production logic. The technical characteristics and images of the products indicated are given for information only and are not binding in any way, since they may be modified without prior notice.

Revision date: 2026-02-02

EVR-R 115÷230V AC

VM332400

Measure	
Minimum measurable value	3% of full scale
Operating conditions	
Operating temperature range	0 ÷ 50 °C
Relative humidity	20% ÷ 90% non-condensing RH
Storage temperature range	-25 ÷ 70 °C
Viewing	
Display	Red LEDs
Digits number	3
Digits size	14 mm
Viewing	Max 999
Outputs	
Relay type	Heat exchange
Relay capacity at 250 Vac	10 A
Terminations	
Termination type	Plug-in terminal block
Maximum cable cross-section	2.5 mm²
Mechanical features	
Protection degree	IP40
Overall dimensions	
Height (A)	72 mm
Width (B)	72 mm
Depth (C)	89 mm

Dimensions

Front View

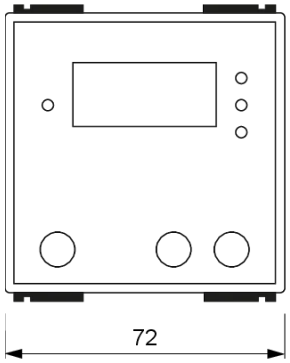

Side View

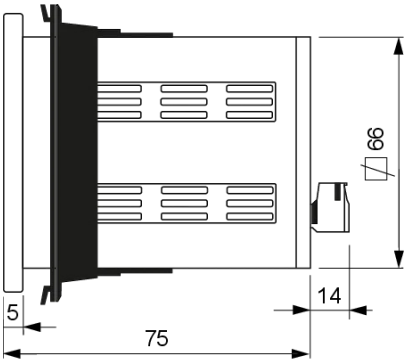

Vemer S.p.A. declines all responsibility for the use of the products for purposes other than those for which they are intended, as indicated in the technical documentation. Vemer S.p.A. reserves the right to make, without prior notice, such changes as may, in its sole discretion, improve the technical and functional characteristics of the products and the related production logic. The technical characteristics and images of the products indicated are given for information only and are not binding in any way, since they may be modified without prior notice.

Wiring diagram

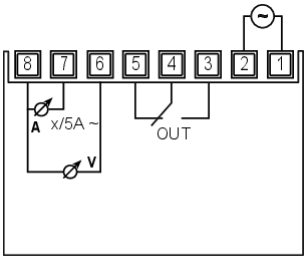

Product variants

EVR-R 24V AC

VM332402

Panel-mounted multi-range voltmeter-ammeter with over/under limit relay, 24 Vac

Reference standards

Compliance with Community Directives:

• 2014/35/UE (LVD) • 2014/30/UE (EMCD) • 2011/65/UE e 2015/863/UE (ROHS)

is declared with reference to the following Standards:

• EN 61010-1 • EN IEC 61000-6-2 • EN IEC 61000-6-3 • EN IEC 63000

Vemer S.p.A. declines all responsibility for the use of the products for purposes other than those for which they are intended, as indicated in the technical documentation. Vemer S.p.A. reserves the right to make, without prior notice, such changes as may, in its sole discretion, improve the technical and functional characteristics of the products and the related production logic. The technical characteristics and images of the products indicated are given for information only and are not binding in any way, since they may be modified without prior notice.