TU3B 10/5A

VJ31462005

Current transformers and shunts / Measurement and control



Panel-mounted wound primary current transformer for AC devices, with x/5 A transformation ratio.

General features

- Wound primary current transformer
- Plastic enclosure
- Operating temperature: -10 °C ÷ 50 °C

Technical specifications

Power supply	
Frequency	50 / 60 Hz
Measure	
Transformation ratio	10/5 A
Functional characteristics	
Maximum continuous overload	1,2 In A A
Safety factor	<5
Maximum operating voltage	720 V
Rated withstand voltage at 50 Hz for 1 min	3 kV
Rated power Class 0.5	10 VA
Rated power Class 1	20 VA
Physical features	
Insulated housing	✓
Overall dimensions	
Width (B)	104 mm
Depth (C)	112 mm
Diameter dimension	
Dimension Ø - A	77 mm

Vemer S.p.A. declines all responsibility for the use of the products for purposes other than those for which they are intended, as indicated in the technical documentation. Vemer S.p.A. reserves the right to make, without prior notice, such changes as may, in its sole discretion, improve the technical and functional characteristics of the products and the related production logic. The technical characteristics and images of the products indicated are given for information only and are not binding in any way, since they may be modified without prior notice.

Revision date: 2026-02-02

TU3B 10/5A

VJ31462005

Dimensions

Front View

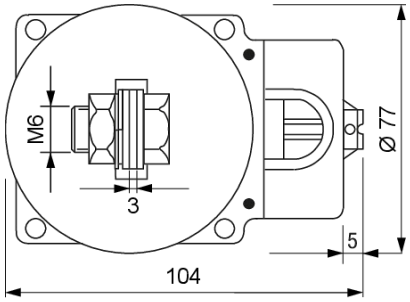

Side View

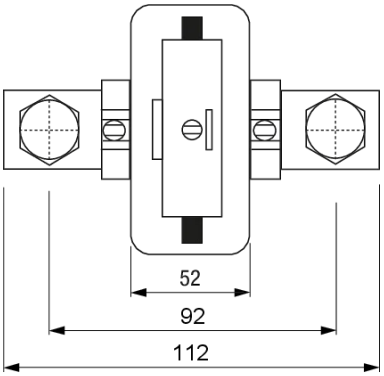

Wiring diagram

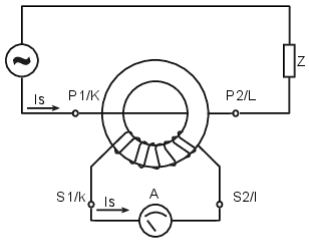

When connecting all current transformers, it is important to respect the current directions.

- Primary: P1/K to P2/L
- Secondary: S1/k to S2/l

Note: The current-carrying capacity of the current transformer must correspond to the full scale of the device.

Product variants

TU3B 25/5A

VJ31532305

Primary wound current transformer (20 VA) with 25/5 A rating

TU3B 10/5A

VJ31792005

Primary wound current transformer (10 VA) with 10/5 A rating

TU3B 15/5A

VJ31792105

Primary wound current transformer (10 VA) with 15/5 A rating

TU3B 25/5A

VJ31872305

Primary wound current transformer (10 VA) with 25/5 A rating

Reference standards

Compliance with Community Directives:

• 2014/35/UE (LVD) • 2014/30/UE (EMCD) • 2011/65/UE e 2015/863/UE (ROHS)

is declared with reference to the following Standards:

• EN 61010-1 • EN 61869-2 • EN IEC 61000-6-2 • EN IEC 61000-6-3 • EN IEC 63000

Vemer S.p.A. declines all responsibility for the use of the products for purposes other than those for which they are intended, as indicated in the technical documentation. Vemer S.p.A. reserves the right to make, without prior notice, such changes as may, in its sole discretion, improve the technical and functional characteristics of the products and the related production logic. The technical characteristics and images of the products indicated are given for information only and are not binding in any way, since they may be modified without prior notice.