TU 40 60/5A

VM713500



Through-bar current transformer for AC devices, x/5 A and x/1 A, suitable for DIN-rail or panel mounting (using the supplied supports).

General features

- Busbar passage: 25–30–40 mm
- Cable passage: Ø 30 mm
- Double clamp for secondary
- Opening (hole) for cable or busbar passage (primary)

Technical specifications

Power supply	
Frequency	50 / 60 Hz
Measure	
Transformation ratio	60/5 A
Functional characteristics	
Maximum continuous overload	1,2 In A A
Safety factor	<5
Maximum operating voltage	720 V
Rated withstand voltage at 50 Hz for 1 min	3 kV
Rated power Class 1	1.25 VA
Rated power Class 3	2 VA
Operating conditions	
Operating temperature range	-10 ÷ 50 °C
Physical features	
Insulated housing	✓
Overall dimensions	
Height (A)	96 mm
Width (B)	71 mm
Depth (C)	72.5 mm

Vemer S.p.A. declines all responsibility for the use of the products for purposes other than those for which they are intended, as indicated in the technical documentation. Vemer S.p.A. reserves the right to make, without prior notice, such changes as may, in its sole discretion, improve the technical and functional characteristics of the products and the related production logic. The technical characteristics and images of the products indicated are given for information only and are not binding in any way, since they may be modified without prior notice.

Revision date: 2026-02-02

TU 40 60/5A

VM713500

Dimensions

Front View

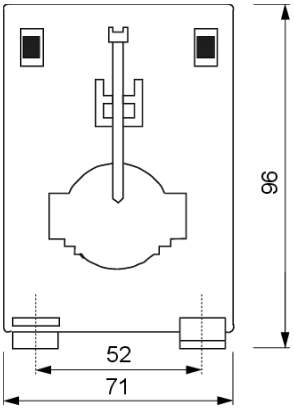

Side View

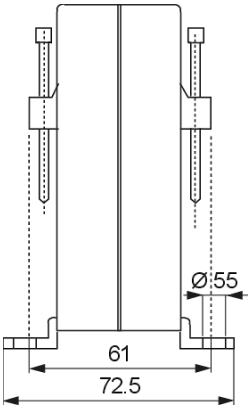

Hole Detail

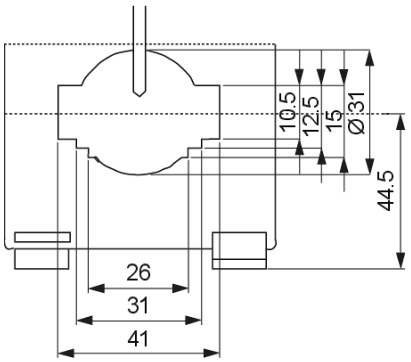

Wiring diagram

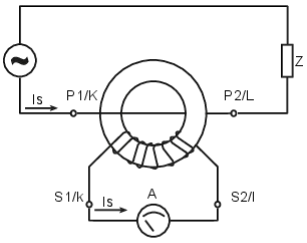

When connecting all current transformers, it is important to respect the current directions.

- Primary: P1/K to P2/L
- Secondary: S1/k to S2/l

Note: The current-carrying capacity of the current transformer must correspond to the full scale of the device.

Product variants

TU 40 50/5A
VM712700
Through-bar current transformer 50/5 A

TU 40 75/5A
VM714300
Through-bar current transformer 75/5 A

TU 40 100/5A
VM715000
Through-bar current transformer 100/5 A

TU 40 125/5A
VM716800
Through-bar current transformer 125/5 A

TU 40 150/5A
VM717600
Through-bar current transformer 150/5 A

TU 40 200/5A
VM718400
Through-bar current transformer 200/5 A

TU 40 250/5A
VM719200
Through-bar current transformer 250/5 A

TU 40 300/5A
VM720000
Through-bar current transformer 300/5 A

TU 40 400/5A
VM721800
Through-bar current transformer 400/5 A

TU 40 500/5A
VM722600
Through-bar current transformer 500/5 A

TU 40 600/5A
VM723400
Through-bar current transformer 600/5 A

TU 40 800/5A
VM724200
Through-bar current transformer 800/5 A

TU 40 1000/5A
VM725900
Through-bar current transformer 1000/5 A

TU 40 150/1A
VM717621
Through-bar current transformer 150/1 A

TU 40 250/1A
VM719221
Through-bar current transformer 250/1 A

Vemer S.p.A. declines all responsibility for the use of the products for purposes other than those for which they are intended, as indicated in the technical documentation. Vemer S.p.A. reserves the right to make, without prior notice, such changes as may, in its sole discretion, improve the technical and functional characteristics of the products and the related production logic. The technical characteristics and images of the products indicated are given for information only and are not binding in any way, since they may be modified without prior notice.

Revision date: 2026-02-02

Reference standards

Compliance with Community Directives:

• 2014/35/UE (LVD) • 2014/30/UE (EMCD) • 2011/65/UE e 2015/863/UE (ROHS)

is declared with reference to the following Standards:

• EN 61010-1 • EN 61869-2 • EN IEC 61000-6-2 • EN IEC 61000-6-3 • EN IEC 63000

Vemer S.p.A. declines all responsibility for the use of the products for purposes other than those for which they are intended, as indicated in the technical documentation. Vemer S.p.A. reserves the right to make, without prior notice, such changes as may, in its sole discretion, improve the technical and functional characteristics of the products and the related production logic. The technical characteristics and images of the products indicated are given for information only and are not binding in any way, since they may be modified without prior notice.