VCR

VE144200

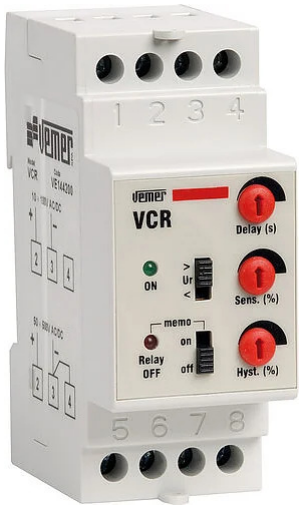

Panel-mounted voltage control relay in 2-DIN module box that enables an external circuit to be operated according to the programmed switching value. Threshold, hysteresis and switching delay values can be set. 230 Vac power supply, with 1 relay.

General features

- Selector for maximum or minimum mode
- Trimmer for switching delay setting
- Trimmer for threshold value setting
- Trimmer for hysteresis value setting
- Selector switch for activating the storage function
- Power presence LED
- Input signal:
  - for VCR: 10V to 100V or 50V to 500V
  - for CCR: 0.15A ÷ 1.5A or 1A ÷ 10A
- Adjustable parameters via trimmer
- Alarm memory function can be activated via selector switch
- Possibility to select maximum or minimum mode via selector
- Full-scale selection via wiring

Technical specifications

Power supply	
Power supply	230 Vac (-15% ÷ +10%)
Frequency	50 / 60 Hz
Absorption	< 4 VA
Parameter settings	
Differential/Hysteresis	Adjustable between 5% and 50% of the threshold
Switching delay	0,1 ÷ 10 secondi
Measure	
AC voltage range	500 V
DC voltage range	500 V
Minimum measurable voltage	10 V

Vemer S.p.A. declines all responsibility for the use of the products for purposes other than those for which they are intended, as indicated in the technical documentation. Vemer S.p.A. reserves the right to make, without prior notice, such changes as may, in its sole discretion, improve the technical and functional characteristics of the products and the related production logic. The technical characteristics and images of the products indicated are given for information only and are not binding in any way, since they may be modified without prior notice.

Revision date: 2026-02-02

Operating conditions	
Operating temperature range	-5 ÷ 55 °C
Storage temperature range	-25 ÷ 70 °C
Outputs	
Relay number	1
Relay type	Heat exchange
Relay capacity at 250 Vac	8 A
Terminations	
Termination type	Terminal blocks
Maximum cable cross-section	6 mm²
Overall dimensions	
Height (A)	88 mm
Width (B)	36 mm
Depth (C)	65 mm

Dimensions

Front View

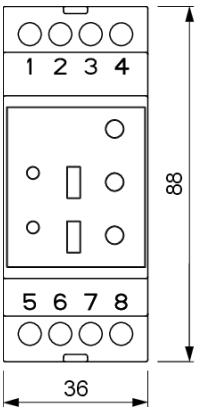

Side View

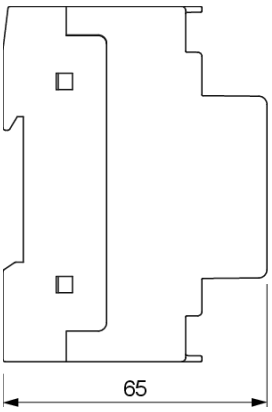

Wiring diagram

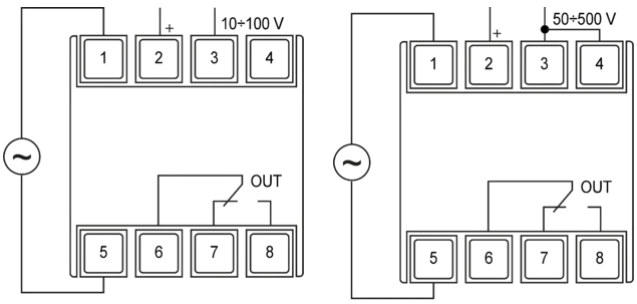

Vemer S.p.A. declines all responsibility for the use of the products for purposes other than those for which they are intended, as indicated in the technical documentation. Vemer S.p.A. reserves the right to make, without prior notice, such changes as may, in its sole discretion, improve the technical and functional characteristics of the products and the related production logic. The technical characteristics and images of the products indicated are given for information only and are not binding in any way, since they may be modified without prior notice.

Reference standards

Compliance with Community Directives:

• 2014/35/UE (LVD) • 2014/30/UE (EMCD) • 2011/65/UE e 2015/863/UE (ROHS)

is declared with reference to the following Standards:

• EN 61010-1 • EN IEC 61000-6-2 • EN IEC 61000-6-3 • EN IEC 63000

Vemer S.p.A. declines all responsibility for the use of the products for purposes other than those for which they are intended, as indicated in the technical documentation. Vemer S.p.A. reserves the right to make, without prior notice, such changes as may, in its sole discretion, improve the technical and functional characteristics of the products and the related production logic. The technical characteristics and images of the products indicated are given for information only and are not binding in any way, since they may be modified without prior notice.