# FHT-1P3D

VM666500






Digital panel-mounted temperature controller (33x75) for temperature control. The device can be connected to resistance thermometer probes (Ni100, Pt100), thermocouples J, K, L, R, S, T, E, N and linear sensors.

## General features

- Possibility to select the probe type among thermocouples, RTDs and linear sensors
- Password protection for settings
- Parameter setting in digital mode:
  - Set-point
  - Differential
  - Neutral zone
  - Output actuation times
  - Function and digital input delay time
  - Alarm delay time
  - Probe calibration OFFSET
  - Displayed resolution
  - Temperature measurement unit
  - Measurement display filter (refresh rate)
  - Probe input type
- Modes of operation (regulation)
  - ON/OFF heating or cooling (with or without Neutral Zone)
  - PWM Direct, Reverse and Neutral Zone action
  - ALARM
  - Cooling mode
  - Special mode
- Acoustic and visual alarm signalling for:
  - probe alarm (malfunction)
  - minimum or maximum alarm
- Opto-isolated RS-485 serial communication output (MODBUS protocol)
- Power for the active probe is supplied directly by the device

## Technical specifications

| | |
|---|---|
| **Power supply** | |
| Power supply | 12 ÷ 24 Vac/Vdc (-10% ÷ +10%) |
| Frequency | 50 / 60 Hz |
| Absorption | 3 VA |
| **Measure** | |
| Temperature display resolution | 0.1 (for values in the range -9.9 ÷ 99.9) °C<br>1 (for values <-9,9 and > 99.9) °C |

Vemer S.p.A. declines all responsibility for the use of the products for purposes other than those for which they are intended, as indicated in the technical documentation. Vemer S.p.A. reserves the right to make, without prior notice, such changes as may, in its sole discretion, improve the technical and functional characteristics of the products and the related production logic. The technical characteristics and images of the products indicated are given for information only and are not binding in any way, since they may be modified without prior notice.



Revision date: 2026-02-02

| | |
|---|---|
| **Measure** | |
| Temperature measurement accuracy | ± 0.5 % of full scale value ± 1 digit °C |
| **Functions** | |
| Keypad lock function | ✓ |
| Probe alarm buzzer | ✓ |
| **Functional characteristics** | |
| Temperature display range | -99 ÷ 999 (depending on probe selected) °C |
| **Operating conditions** | |
| Operating temperature range | 0 ÷ 50 °C |
| Relative humidity | < 80% RH |
| Storage temperature range | -25 ÷ 70 °C |
| **Viewing** | |
| Display | Red LEDs |
| Digits number | 3 |
| Display range | -99 ÷ 999 °C * |
| **Inputs** | |
| Digital input | ✓ |
| No. digital inputs | 1 |
| Auxiliary input features | Configurable |
| Number of connectable probes | 1 |
| Type of connectable probes | Ni 100<br>Pt 100 (2 or 3 wires)<br>J (Fe-CuNi)<br>K (NiCr-Ni)<br>L (Fe-CuNi)<br>R (Pt13Rh-Pt)<br>S (Pt10Rh-Pt)<br>T (Cu-CuNi)<br>E (NiCr-CuNi)<br>N (NiCrSi-NiSi)<br>Linear sensors (output 0-20 mA, 4-20 mA, 0-1 V) |
| **Outputs** | |
| Relay number | 1 |
| Relay type | Heat exchange |
| Relay capacity at 250 Vac | 8 A |
| Analogue Output | ✓ |
| Note analogue output | 0 ÷ 10 V<br>4 ÷ 20 mA<br>0 ÷ 20 mA |
| Serial interface output | ✓ |
| Probe power supply | 9 Vdc (max 30 mA) |


Vemer S.p.A. declines all responsibility for the use of the products for purposes other than those for which they are intended, as indicated in the technical documentation. Vemer S.p.A. reserves the right to make, without prior notice, such changes as may, in its sole discretion, improve the technical and functional characteristics of the products and the related production logic. The technical characteristics and images of the products indicated are given for information only and are not binding in any way, since they may be modified without prior notice.

| Mechanical features | |
|---|---|
| Protection degree | IP54 (on the front)<br>IP20 (on terminals) |
| **Overall dimensions** | |
| Height (A) | 33 mm |
| Width (B) | 75 mm |
| Depth (C) | 81 mm |

## Dimensions

Front View

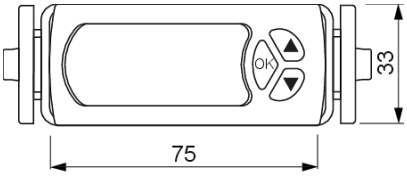


Side View

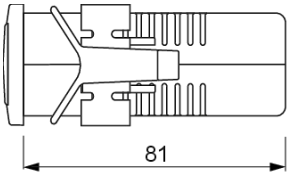


## Wiring diagram

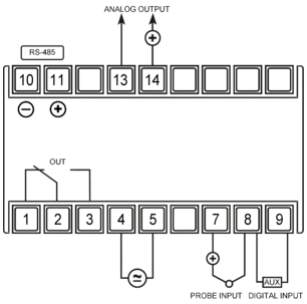


Probe input:
- TC

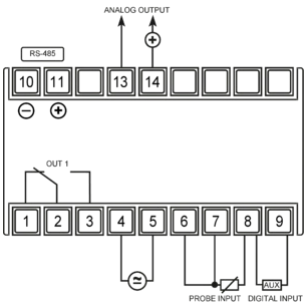


3-wire probe input:
- Pt 100
- Ni 100

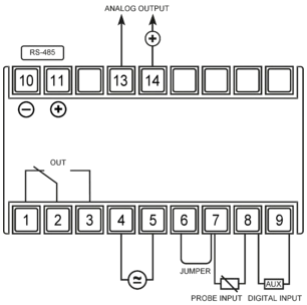


2-wire probe input:
- Pt 100
- Ni 100

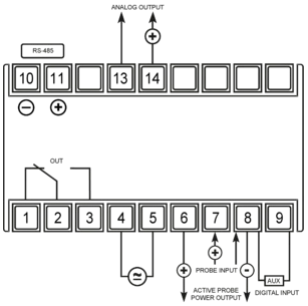


Probe input:
- 0÷1 V
- 4÷20 mA
- 0÷20 mA

Active probe output power:
- 9 Vdc max 30 mA


Vemer S.p.A. declines all responsibility for the use of the products for purposes other than those for which they are intended, as indicated in the technical documentation. Vemer S.p.A. reserves the right to make, without prior notice, such changes as may, in its sole discretion, improve the technical and functional characteristics of the products and the related production logic. The technical characteristics and images of the products indicated are given for information only and are not binding in any way, since they may be modified without prior notice.

## Product variants

### FHT-2P3D

VM667300

Digital panel-mounted temperature controller (33×75) connectable with thermocouple probes, resistance thermometers, and linear sensors, 12 ÷ 24 Vac/Vdc, with 2 relays

## Accessories compatible with the product

### Pt 100 EC

VE122800

Pt100 EC RTD sensor, Platinum, 2-wire, for temperature measurement, 1.5 m length

### Pt 100

VJ44250000

Pt100 RTD sensor, Platinum, 3-wire, for temperature measurement, 3 m length

### Pt 100 10MT

VJ44250010

Pt100 RTD sensor, Platinum, 3-wire, for temperature measurement, 10 m length

### Pt 100 E

VN879300

Pt 100 E length 1.5 m

### Ni 100

VJ44170000

Ni100 RTD sensor, Nickel, 3-wire, for temperature measurement, 3 m length

### Fe-Co (J)

VJ44330000

2-wire J-type thermocouple for temperature detection, length 3 m

### Cr-Al (K)

VJ44410000

2-wire type K thermocouple for temperature detection, length 3 m

### Cr-Al 1200 (K)

VJ44900000

2-wire type K thermocouple for temperature detection, length 3 m

### TM3 230/12

VE256400

Transformer with 230 Vac terminals, 3 VA power and 12 V secondary voltage

### TM3 115/12

VE257200

Transformer with 115 Vac terminals, 3 VA power and 12 V secondary voltage

### TM3 230/24

VE258000

Transformer with 230 Vac terminals, 3 VA power and 24 V secondary voltage

### TM3 115/24

VE259800

Transformer with 115 Vac terminals, 3 VA power and 24 V secondary voltage

### TM6 230/12

VE260600

Transformer with 230 Vac terminals, 6 VA power and 12 V secondary voltage

### TM6 230/24

VE261400

Transformer with 230 Vac terminals, 6 VA power and 24 V secondary voltage

## Reference standards

Compliance with Community Directives:

**• 2014/35/UE (LVD) • 2014/30/UE (EMCD) • 2011/65/UE e 2015/863/UE (ROHS)**

is declared with reference to the following Standards:

**• EN IEC 60730-2-9 • EN IEC 63000**


Vemer S.p.A. declines all responsibility for the use of the products for purposes other than those for which they are intended, as indicated in the technical documentation. Vemer S.p.A. reserves the right to make, without prior notice, such changes as may, in its sole discretion, improve the technical and functional characteristics of the products and the related production logic. The technical characteristics and images of the products indicated are given for information only and are not binding in any way, since they may be modified without prior notice.