HT NiPt-1DA

VM630100



Digital DIN-rail mounted temperature controller (4 modules) for temperature control in both heating and cooling in applications such as ovens, refrigeration units and room temperature. The device can be connected to Ni100 and Pt100 resistance temperature detectors.

General features

- Possibility of selecting the probe type
- Password protection for settings
- Parameter setting in digital mode:
  - Set-point
  - Differential
  - Neutral zone
  - Output actuation times
  - Function and digital input delay time
  - Alarm delay time
  - Probe calibration OFFSET
  - Displayed resolution
  - Temperature measurement unit
  - Measurement display filter (refresh rate)
  - Probe input type
- Modes of operation (regulation)
  - ON/OFF heating or cooling (with or without Neutral Zone)
  - PWM Direct, Reverse and Neutral Zone action
  - ALARM
  - Cooling mode
  - Special mode
- Digital input with configurable function:
  - external alarm
  - ON/OFF regulation
  - probe selection to display
  - set-point switching
  - Direct/Reverse switching
- Acoustic and visual alarm signalling for:
  - external alarm (digital input)
  - probe alarm (malfunction)
  - minimum or maximum alarm

Vemer S.p.A. declines all responsibility for the use of the products for purposes other than those for which they are intended, as indicated in the technical documentation. Vemer S.p.A. reserves the right to make, without prior notice, such changes as may, in its sole discretion, improve the technical and functional characteristics of the products and the related production logic. The technical characteristics and images of the products indicated are given for information only and are not binding in any way, since they may be modified without prior notice.

Revision date: 2026-02-02

Technical specifications

Power supply	
Power supply	24 / 230 Vac (-10% ÷ +10%)
Frequency	50 / 60 Hz
Absorption	4.5 VA
Measure	
Temperature display resolution	0.1 (for values in the range -9.9 ÷ 99.9) °C 1 (for values <-9,9 and > 99.9) °C
Temperature measurement accuracy	± 0.5 % of full scale value ± 1 digit °C
Functions	
Keypad lock function	✓
Probe alarm buzzer	✓
Functional characteristics	
Temperature display range	-99 ÷ 999 (depending on probe selected) °C
Operating conditions	
Operating temperature range	0 ÷ 50 °C
Relative humidity	< 80% RH
Storage temperature range	-25 ÷ 70 °C
Viewing	
Display	Red LEDs
Digits number	3
Display range	-99 ÷ 999 °C *
Inputs	
Digital input	✓
No. digital inputs	1
Auxiliary input features	Configurable
Number of connectable probes	1
Type of connectable probes	Ni 100 Pt 100 (2 or 3 wires)
Outputs	
Relay number	1
Relay capacity at 250 Vac	8 A
Mechanical features	
Protection degree	IP40 (on the front) IP20 (on terminals)
Overall dimensions	
Height (A)	87 mm
Width (B)	72 mm

Vemer S.p.A. declines all responsibility for the use of the products for purposes other than those for which they are intended, as indicated in the technical documentation. Vemer S.p.A. reserves the right to make, without prior notice, such changes as may, in its sole discretion, improve the technical and functional characteristics of the products and the related production logic. The technical characteristics and images of the products indicated are given for information only and are not binding in any way, since they may be modified without prior notice.

Overall dimensions	
Depth (C)	65 mm

Dimensions

Front View

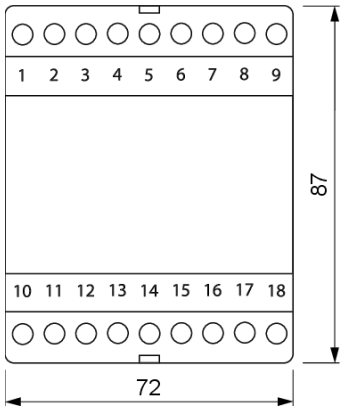

Side View

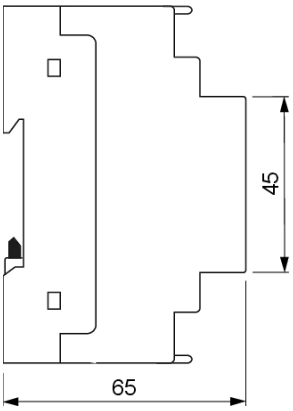

Wiring diagram

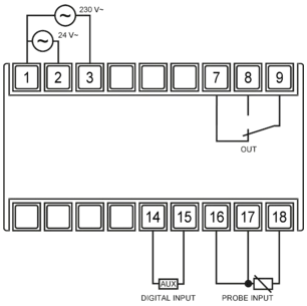

3-wire probe input:

- Pt 100
- Ni 100

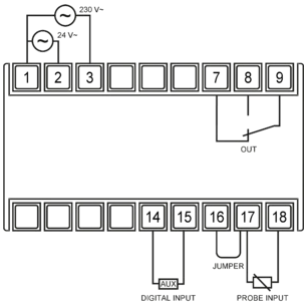

2-wire probe input:

- Pt 100
- Ni 100

Product variants

HT NiPt-2DA

VM631900

DIN-rail mounted digital temperature controller (4 modules) connectable with 24/230 Vac Ni100 and Pt100 resistance thermometer probes, digital input, with 2 relays

Vemer S.p.A. declines all responsibility for the use of the products for purposes other than those for which they are intended, as indicated in the technical documentation. Vemer S.p.A. reserves the right to make, without prior notice, such changes as may, in its sole discretion, improve the technical and functional characteristics of the products and the related production logic. The technical characteristics and images of the products indicated are given for information only and are not binding in any way, since they may be modified without prior notice.

Accessories compatible with the product

Pt 100 EC

VE122800

Pt100 EC RTD sensor, Platinum, 2-wire, for temperature measurement, 1.5 m length

Pt 100

VJ44250000

Pt100 RTD sensor, Platinum, 3-wire, for temperature measurement, 3 m length

Pt 100 10MT

VJ44250010

Pt100 RTD sensor, Platinum, 3-wire, for temperature measurement, 10 m length

Pt 100 E

VN879300

Pt 100 E length 1.5 m

Ni 100

VJ44170000

Ni100 RTD sensor, Nickel, 3-wire, for temperature measurement, 3 m length

Reference standards

Compliance with Community Directives:

• 2014/35/UE (LVD) • 2014/30/UE (EMCD) • 2011/65/UE e 2015/863/UE (ROHS)

is declared with reference to the following Standards:

• EN IEC 60730-2-9 • EN IEC 63000

Vemer S.p.A. declines all responsibility for the use of the products for purposes other than those for which they are intended, as indicated in the technical documentation. Vemer S.p.A. reserves the right to make, without prior notice, such changes as may, in its sole discretion, improve the technical and functional characteristics of the products and the related production logic. The technical characteristics and images of the products indicated are given for information only and are not binding in any way, since they may be modified without prior notice.