HT NTC-2DA

VM638400



Digital DIN-rail mounted temperature controller (4 modules) for temperature control in both heating and cooling in applications such as refrigerated counters, cold stores and room temperature. The device can be connected to NTC thermistors.

General features

- 2 probe inputs for measuring two temperatures (one probe for regulation, the other for display)
- LED indicating T2 temperature display
- Password protection for stored settings
- Parameter setting in digital mode:
  - Set-point
  - Differential
  - Neutral zone
  - Output actuation times
  - Function and digital input delay time
  - Alarm delay time
  - Probe calibration OFFSET
  - Displayed resolution
  - Temperature measurement unit
  - Measurement display filter (refresh rate)
  - Probe input type
- Modes of operation (regulation)
  - ON/OFF heating or cooling (with or without Neutral Zone)
  - PWM Direct, Reverse and Neutral Zone action
  - ALARM
  - Cooling mode
  - Special mode
- Digital input with configurable function:
  - external alarm
  - ON/OFF regulation
  - probe selection to display
  - set-point switching
  - Direct/Reverse switching
- Acoustic and visual alarm signalling for:
  - external alarm (digital input)
  - probe alarm (malfunction)
  - minimum or maximum alarm

Vemer S.p.A. declines all responsibility for the use of the products for purposes other than those for which they are intended, as indicated in the technical documentation. Vemer S.p.A. reserves the right to make, without prior notice, such changes as may, in its sole discretion, improve the technical and functional characteristics of the products and the related production logic. The technical characteristics and images of the products indicated are given for information only and are not binding in any way, since they may be modified without prior notice.

Revision date: 2026-02-02

Technical specifications

Power supply	
Power supply	24 / 230 Vac (-10% ÷ +10%)
Frequency	50 / 60 Hz
Absorption	4.5 VA
Measure	
Temperature display resolution	0.1 (for values in the range -9.9 ÷ 99.9) °C 1 (for values <-9,9 and > 99.9) °C
Temperature measurement accuracy	± 0.5 % of full scale value ± 1 digit °C
Functions	
Keypad lock function	✓
Probe alarm buzzer	✓
Functional characteristics	
Temperature display range	-40 ÷ 110 °C
Operating conditions	
Operating temperature range	0 ÷ 50 °C
Relative humidity	< 80% RH
Storage temperature range	-25 ÷ 70 °C
Viewing	
Display	Red LEDs
Digits number	3
Display range	-99 ÷ 999 °C *
Inputs	
Digital input	✓
No. digital inputs	1
Auxiliary input features	Configurable
Number of connectable probes	2
Type of connectable probes	NTC (10 kΩ at 25 °C)
Outputs	
Relay number	2
Relay capacity at 250 Vac	8 A
Mechanical features	
Protection degree	IP40 (on the front) IP20 (on terminals)
Overall dimensions	
Height (A)	87 mm
Width (B)	72 mm
Depth (C)	65 mm

Vemer S.p.A. declines all responsibility for the use of the products for purposes other than those for which they are intended, as indicated in the technical documentation. Vemer S.p.A. reserves the right to make, without prior notice, such changes as may, in its sole discretion, improve the technical and functional characteristics of the products and the related production logic. The technical characteristics and images of the products indicated are given for information only and are not binding in any way, since they may be modified without prior notice.

Dimensions

Front View

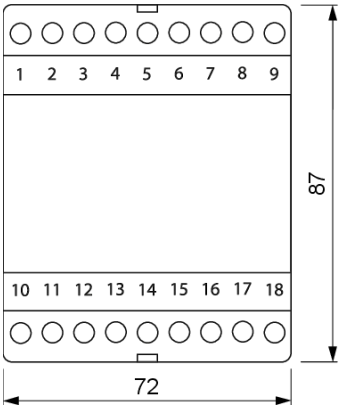

Side View

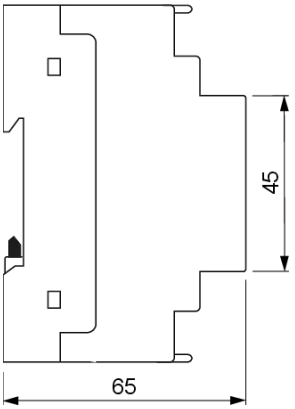

Wiring diagram

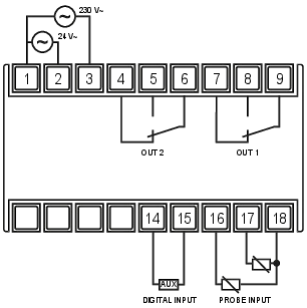

Probe input:

- NTC1
- NTC2

Product variants

HT NTC-1DA

VM637600

DIN-rail mounted digital temperature controller (4 modules) connectable with 24/230 Vac NTC resistance thermometer probes, digital input, with 1 relay

Accessories compatible with the product

NTC C

VE123600

NTC C thermistor with a 2-wire NTC semiconductor sensor encased in eco-printed plastic for temperature detection, length 1.5 m

NTC BC

VE124400

NTC BC thermistor with a 2-wire NTC semiconductor sensor housed in eco-molded plastic and equipped with a cable, particularly suitable for measuring the temperature outside pipes; length: 1.5 m

NTC 3MT

VE152500

NTC RTD sensor, 2-wire, with NTC semiconductor for temperature measurement, 3 m length

NTC

VN870200

NTC RTD sensor, 2-wire, with NTC semiconductor for temperature measurement, 1.5 m length

Vemer S.p.A. declines all responsibility for the use of the products for purposes other than those for which they are intended, as indicated in the technical documentation. Vemer S.p.A. reserves the right to make, without prior notice, such changes as may, in its sole discretion, improve the technical and functional characteristics of the products and the related production logic. The technical characteristics and images of the products indicated are given for information only and are not binding in any way, since they may be modified without prior notice.

Reference standards

Compliance with Community Directives:

• 2014/35/UE (LVD) • 2014/30/UE (EMCD) • 2011/65/UE e 2015/863/UE (ROHS)

is declared with reference to the following Standards:

• EN IEC 60730-2-9 • EN IEC 63000

Vemer S.p.A. declines all responsibility for the use of the products for purposes other than those for which they are intended, as indicated in the technical documentation. Vemer S.p.A. reserves the right to make, without prior notice, such changes as may, in its sole discretion, improve the technical and functional characteristics of the products and the related production logic. The technical characteristics and images of the products indicated are given for information only and are not binding in any way, since they may be modified without prior notice.