# FHT-1DA

VM669900






Digital DIN-rail mounted temperature controller (4 modules) for temperature control. The device can be connected to resistance thermometer probes (Ni100, Pt100), thermocouples J, K, L, R, S, T, E, N and linear sensors.

## General features

- Possibility of selecting the probe type among Thermocouples, RTDs and Linear sensors
- Password protection for stored settings
- Parameter setting in digital mode:
  - Set-point
  - Differential
  - Neutral zone
  - Output actuation times
  - Function and digital input delay time
  - Alarm delay time
  - Probe calibration OFFSET
  - Displayed resolution
  - Temperature measurement unit
  - Measurement display filter (refresh rate)
  - Probe input type
- Modes of operation (regulation)
  - ON/OFF heating or cooling (with or without Neutral Zone)
  - PWM Direct, Reverse and Neutral Zone action
  - ALARM
  - Cooling mode
  - Special mode
- Digital input with configurable function:
  - external alarm
  - ON/OFF regulation
  - probe selection to display
  - set-point switching
  - Direct/Reverse switching
- Acoustic and visual alarm signalling for:
  - external alarm (digital input)
  - probe alarm (malfunction)
  - minimum or maximum alarm
- Opto-isolated RS-485 serial communication output (MODBUS protocol)
- Power for the active probe is supplied directly by the device

Vemer S.p.A. declines all responsibility for the use of the products for purposes other than those for which they are intended, as indicated in the technical documentation. Vemer S.p.A. reserves the right to make, without prior notice, such changes as may, in its sole discretion, improve the technical and functional characteristics of the products and the related production logic. The technical characteristics and images of the products indicated are given for information only and are not binding in any way, since they may be modified without prior notice.



Revision date: 2026-02-02

## Technical specifications

| | |
|---|---|
| **Power supply** | |
| Power supply | 24 / 230 Vac (-10% ÷ +10%) |
| Frequency | 50 / 60 Hz |
| Absorption | 4.5 VA |
| **Measure** | |
| Temperature display resolution | 0.1 (for values in the range -9.9 ÷ 99.9) °C<br>1 (for values <-9,9 and > 99.9) °C |
| Temperature measurement accuracy | ± 0.5 % of full scale value ± 1 digit °C |
| **Functions** | |
| Keypad lock function | ✓ |
| Probe alarm buzzer | ✓ |
| **Functional characteristics** | |
| Temperature display range | -99 ÷ 999 (depending on probe selected) °C |
| **Operating conditions** | |
| Operating temperature range | 0 ÷ 50 °C |
| Relative humidity | < 80% RH |
| Storage temperature range | -25 ÷ 70 °C |
| **Viewing** | |
| Display | Red LEDs |
| Digits number | 3 |
| Display range | -99 ÷ 999 °C * |
| **Inputs** | |
| Digital input | ✓ |
| No. digital inputs | 1 |
| Auxiliary input features | Configurable |
| Number of connectable probes | 1 |
| Type of connectable probes | Ni 100<br>Pt 100 (2 or 3 wires)<br>J (Fe-CuNi)<br>K (NiCr-Ni)<br>L (Fe-CuNi)<br>R (Pt13Rh-Pt)<br>S (Pt10Rh-Pt)<br>T (Cu-CuNi)<br>E (NiCr-CuNi)<br>N (NiCrSi-NiSi)<br>Linear sensors (output 0-20 mA, 4-20 mA, 0-1 V) |
| **Outputs** | |
| Relay number | 1 |
| Relay type | Heat exchange |


Vemer S.p.A. declines all responsibility for the use of the products for purposes other than those for which they are intended, as indicated in the technical documentation. Vemer S.p.A. reserves the right to make, without prior notice, such changes as may, in its sole discretion, improve the technical and functional characteristics of the products and the related production logic. The technical characteristics and images of the products indicated are given for information only and are not binding in any way, since they may be modified without prior notice.

| | |
|---|---|
| **Outputs** | |
| Relay capacity at 250 Vac | 8 A |
| Analogue Output | ✓ |
| Note analogue output | 0 ÷ 10 V<br>4 ÷ 20 mA<br>0 ÷ 20 mA |
| Serial interface output | ✓ |
| Probe power supply | 9 Vdc (max 30 mA) |
| **Mechanical features** | |
| Protection degree | IP40 (on the front)<br>IP20 (on terminals) |
| **Overall dimensions** | |
| Height (A) | 87 mm |
| Width (B) | 72 mm |
| Depth (C) | 65 mm |

## Dimensions

Front View

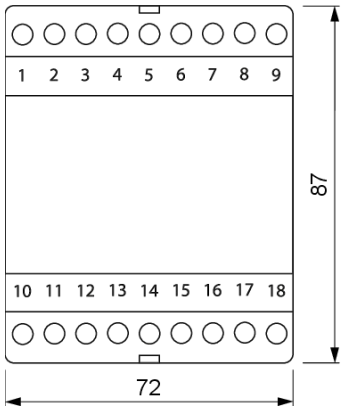


Side View

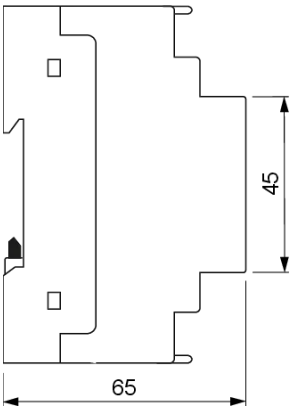



Vemer S.p.A. declines all responsibility for the use of the products for purposes other than those for which they are intended, as indicated in the technical documentation. Vemer S.p.A. reserves the right to make, without prior notice, such changes as may, in its sole discretion, improve the technical and functional characteristics of the products and the related production logic. The technical characteristics and images of the products indicated are given for information only and are not binding in any way, since they may be modified without prior notice.

## Wiring diagram

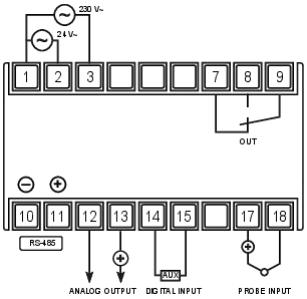


Probe input:
- TC

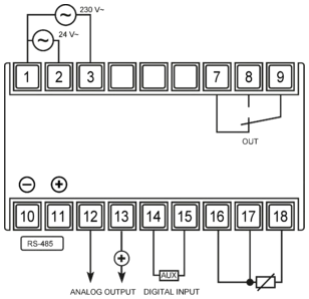


3-wire probe input:
- Pt 100
- Ni 100

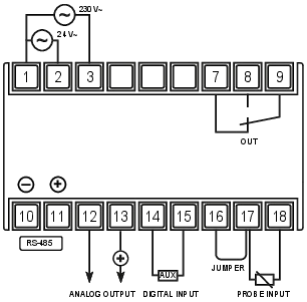


2-wire probe input:
- Pt 100
- Ni 100

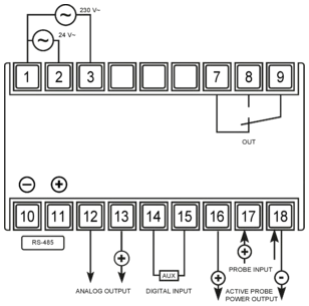


Probe input:
- 0÷1 V
- 4÷20 mA
- 0÷20 mA

Active probe output power:
- 9 Vdc max 30 mA

## Product variants

### FHT-2DA

VM670700

Digital DIN-rail temperature controller (4 modules) connectable with thermocouple probes, resistance thermometers and linear sensors, with 24/230 Vac power supply, digital input and 2 relays

## Accessories compatible with the product

### Pt 100 EC

VE122800

Pt100 EC RTD sensor, Platinum, 2-wire, for temperature measurement, 1.5 m length

### Pt 100

VJ44250000

Pt100 RTD sensor, Platinum, 3-wire, for temperature measurement, 3 m length

### Pt 100 10MT

VJ44250010

Pt100 RTD sensor, Platinum, 3-wire, for temperature measurement, 10 m length

### Pt 100 E

VN879300

Pt 100 E length 1.5 m

### Ni 100

VJ44170000

Ni100 RTD sensor, Nickel, 3-wire, for temperature measurement, 3 m length

### Fe-Co (J)

VJ44330000

2-wire J-type thermocouple for temperature detection, length 3 m

### Cr-Al (K)

VJ44410000

2-wire type K thermocouple for temperature detection, length 3 m

### Cr-Al 1200 (K)

VJ44900000

2-wire type K thermocouple for temperature detection, length 3 m


Vemer S.p.A. declines all responsibility for the use of the products for purposes other than those for which they are intended, as indicated in the technical documentation. Vemer S.p.A. reserves the right to make, without prior notice, such changes as may, in its sole discretion, improve the technical and functional characteristics of the products and the related production logic. The technical characteristics and images of the products indicated are given for information only and are not binding in any way, since they may be modified without prior notice.

## Reference standards

Compliance with Community Directives:

**• 2014/35/UE (LVD) • 2014/30/UE (EMCD) • 2011/65/UE e 2015/863/UE (ROHS)**

is declared with reference to the following Standards:

**• EN IEC 60730-2-9 • EN IEC 63000**

Vemer S.p.A. declines all responsibility for the use of the products for purposes other than those for which they are intended, as indicated in the technical documentation. Vemer S.p.A. reserves the right to make, without prior notice, such changes as may, in its sole discretion, improve the technical and functional characteristics of the products and the related production logic. The technical characteristics and images of the products indicated are given for information only and are not binding in any way, since they may be modified without prior notice.