FHT-2DA

VM670700



Digital DIN-rail mounted temperature controller (4 modules) for temperature control. The device can be connected to resistance thermometer probes (Ni100, Pt100), thermocouples J, K, L, R, S, T, E, N and linear sensors.

General features

- Possibility of selecting the probe type among Thermocouples, RTDs and Linear sensors
- Password protection for stored settings
- Parameter setting in digital mode:
  - Set-point
  - Differential
  - Neutral zone
  - Output actuation times
  - Function and digital input delay time
  - Alarm delay time
  - Probe calibration OFFSET
  - Displayed resolution
  - Temperature measurement unit
  - Measurement display filter (refresh rate)
  - Probe input type
- Modes of operation (regulation)
  - ON/OFF heating or cooling (with or without Neutral Zone)
  - PWM Direct, Reverse and Neutral Zone action
  - ALARM
  - Cooling mode
  - Special mode
- Digital input with configurable function:
  - external alarm
  - ON/OFF regulation
  - probe selection to display
  - set-point switching
  - Direct/Reverse switching
- Acoustic and visual alarm signalling for:
  - external alarm (digital input)
  - probe alarm (malfunction)
  - minimum or maximum alarm
- Opto-isolated RS-485 serial communication output (MODBUS protocol)
- Power for the active probe is supplied directly by the device

Vemer S.p.A. declines all responsibility for the use of the products for purposes other than those for which they are intended, as indicated in the technical documentation. Vemer S.p.A. reserves the right to make, without prior notice, such changes as may, in its sole discretion, improve the technical and functional characteristics of the products and the related production logic. The technical characteristics and images of the products indicated are given for information only and are not binding in any way, since they may be modified without prior notice.

Revision date: 2026-02-02

Technical specifications

Power supply	
Power supply	24 / 230 Vac (-10% ÷ +10%)
Frequency	50 / 60 Hz
Absorption	4.5 VA
Measure	
Temperature display resolution	0.1 (for values in the range -9.9 ÷ 99.9) °C 1 (for values <-9,9 and > 99.9) °C
Temperature measurement accuracy	± 0.5 % of full scale value ± 1 digit °C
Functions	
Keypad lock function	✓
Probe alarm buzzer	✓
Functional characteristics	
Temperature display range	-99 ÷ 999 (depending on probe selected) °C
Operating conditions	
Operating temperature range	0 ÷ 50 °C
Relative humidity	< 80% RH
Storage temperature range	-25 ÷ 70 °C
Viewing	
Display	Red LEDs
Digits number	3
Display range	-99 ÷ 999 °C *
Inputs	
Digital input	✓
No. digital inputs	1
Auxiliary input features	Configurable
Number of connectable probes	1
Type of connectable probes	Ni 100 Pt 100 (2 or 3 wires) J (Fe-CuNi) K (NiCr-Ni) L (Fe-CuNi) R (Pt13Rh-Pt) S (Pt10Rh-Pt) T (Cu-CuNi) E (NiCr-CuNi) N (NiCrSi-NiSi) Linear sensors (output 0-20 mA, 4-20 mA, 0-1 V)
Outputs	
Relay number	2
Relay type	Heat exchange

Vemer S.p.A. declines all responsibility for the use of the products for purposes other than those for which they are intended, as indicated in the technical documentation. Vemer S.p.A. reserves the right to make, without prior notice, such changes as may, in its sole discretion, improve the technical and functional characteristics of the products and the related production logic. The technical characteristics and images of the products indicated are given for information only and are not binding in any way, since they may be modified without prior notice.

Outputs	
Relay capacity at 250 Vac	8 A
Analogue Output	✓
Note analogue output	0 ÷ 10 V 4 ÷ 20 mA 0 ÷ 20 mA
Serial interface output	✓
Probe power supply	9 Vdc (max 30 mA)
Mechanical features	
Protection degree	IP40 (on the front) IP20 (on terminals)
Overall dimensions	
Height (A)	87 mm
Width (B)	72 mm
Depth (C)	65 mm

Dimensions

Front View

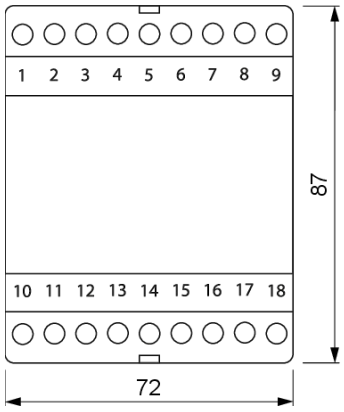

Side View

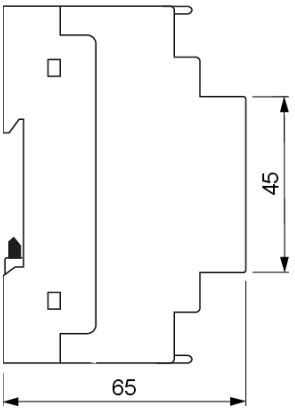

Vemer S.p.A. declines all responsibility for the use of the products for purposes other than those for which they are intended, as indicated in the technical documentation. Vemer S.p.A. reserves the right to make, without prior notice, such changes as may, in its sole discretion, improve the technical and functional characteristics of the products and the related production logic. The technical characteristics and images of the products indicated are given for information only and are not binding in any way, since they may be modified without prior notice.

Wiring diagram

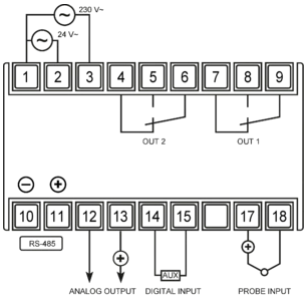

Probe input:
- TC

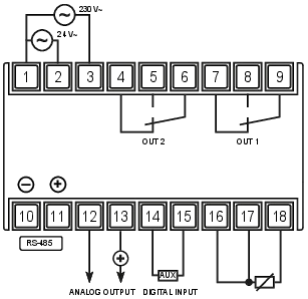

3-wire probe input:
- Pt 100
- Ni 100

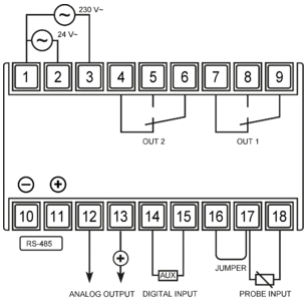

2-wire probe input:
- Pt 100
- Ni 100

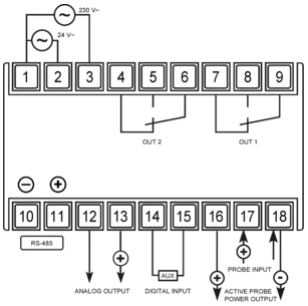

Probe input:
- 0÷1 V
- 4÷20 mA
- 0÷20 mA

Active probe output power:
- 9 Vdc max 30 mA

Product variants

FHT-1DA

VM669900

Digital DIN-rail temperature controller (4 modules) connectable with thermocouple, resistance thermometer and linear sensors, with 24/230 Vac power supply, digital input and 1 relay

Accessories compatible with the product

Pt 100 EC

VE122800

Pt100 EC RTD sensor, Platinum, 2-wire, for temperature measurement, 1.5 m length

Pt 100

VJ44250000

Pt100 RTD sensor, Platinum, 3-wire, for temperature measurement, 3 m length

Pt 100 10MT

VJ44250010

Pt100 RTD sensor, Platinum, 3-wire, for temperature measurement, 10 m length

Pt 100 E

VN879300

Pt 100 E length 1.5 m

Ni 100

VJ44170000

Ni100 RTD sensor, Nickel, 3-wire, for temperature measurement, 3 m length

Fe-Co (J)

VJ44330000

2-wire J-type thermocouple for temperature detection, length 3 m

Cr-Al (K)

VJ44410000

2-wire type K thermocouple for temperature detection, length 3 m

Cr-Al 1200 (K)

VJ44900000

2-wire type K thermocouple for temperature detection, length 3 m

Vemer S.p.A. declines all responsibility for the use of the products for purposes other than those for which they are intended, as indicated in the technical documentation. Vemer S.p.A. reserves the right to make, without prior notice, such changes as may, in its sole discretion, improve the technical and functional characteristics of the products and the related production logic. The technical characteristics and images of the products indicated are given for information only and are not binding in any way, since they may be modified without prior notice.

Reference standards

Compliance with Community Directives:

• 2014/35/UE (LVD) • 2014/30/UE (EMCD) • 2011/65/UE e 2015/863/UE (ROHS)

is declared with reference to the following Standards:

• EN IEC 60730-2-9 • EN IEC 63000

Vemer S.p.A. declines all responsibility for the use of the products for purposes other than those for which they are intended, as indicated in the technical documentation. Vemer S.p.A. reserves the right to make, without prior notice, such changes as may, in its sole discretion, improve the technical and functional characteristics of the products and the related production logic. The technical characteristics and images of the products indicated are given for information only and are not binding in any way, since they may be modified without prior notice.