PR-2P7A

VM649100



Digital panel controller (72x72) suitable for pressure regulation. The device can be connected to linear sensors.

General features

- Parameter setting in digital mode:
  - Set-point
  - Differential
  - Neutral zone
  - Output actuation times
  - Function and digital input delay time
  - Alarm delay time / Buzzer enable
  - Probe calibration OFFSET
  - Display resolution
  - Measurement display filter (refresh rate)
  - Probe input type
  - Password
- Modes of operation (adjustment)
  - ON/OFF Direct and/or Reverse action with or without Neutral Zone
  - PWM Direct, Reverse action with or without Neutral Zone
  - ALARM
  - Special mode
- 2 independent setpoints
- Acoustic and visual alarm signalling for:
  - probe alarm (malfunction)
  - minimum or maximum alarm

Technical specifications

Power supply	
Power supply	24 / 230 Vac (-10% ÷ +10%)
Frequency	50 / 60 Hz
Absorption	4.5 VA

Vemer S.p.A. declines all responsibility for the use of the products for purposes other than those for which they are intended, as indicated in the technical documentation. Vemer S.p.A. reserves the right to make, without prior notice, such changes as may, in its sole discretion, improve the technical and functional characteristics of the products and the related production logic. The technical characteristics and images of the products indicated are given for information only and are not binding in any way, since they may be modified without prior notice.

Revision date: 2026-02-02

Measure	
Pressure display resolution	0.1 bar (for values in the range -9.9 ÷ 99.9 bar) 1 bar (for <-9,9 bar and > 99.9 bar)
Pressure measurement accuracy	± 0.5 % of full scale value ± 1 digit
Functions	
Keypad lock function	✓
Probe alarm buzzer	✓
Functional characteristics	
Pressure display range	-99 ÷ 999 bar
Operating conditions	
Operating temperature range	0 ÷ 50 °C
Relative humidity	< 80% RH
Storage temperature range	-25 ÷ 70 °C
Storage humidity range	< 80% RH
Viewing	
Display	Red LEDs
Digits number	3
Display range	-99 ÷ 999 bar
Inputs	
Number of connectable probes	1
Type of connectable probes	Linear sensors (output 0-20 mA, 4-20 mA, 0-1 V)
Outputs	
Relay number	2
Relay type	Heat exchange
Relay capacity at 250 Vac	8 A
Probe power supply	9 Vdc (max 30 mA)
Mechanical features	
Protection degree	IP54 (on the front) IP20 (on terminals)
Overall dimensions	
Height (A)	72 mm
Width (B)	72 mm
Depth (C)	114 mm

Vemer S.p.A. declines all responsibility for the use of the products for purposes other than those for which they are intended, as indicated in the technical documentation. Vemer S.p.A. reserves the right to make, without prior notice, such changes as may, in its sole discretion, improve the technical and functional characteristics of the products and the related production logic. The technical characteristics and images of the products indicated are given for information only and are not binding in any way, since they may be modified without prior notice.

Dimensions

Front View

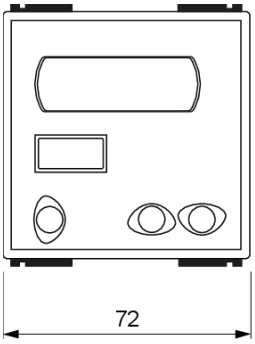

Side View

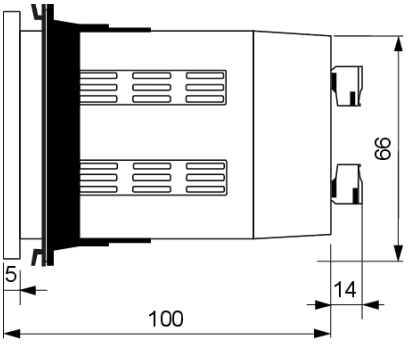

Wiring diagram

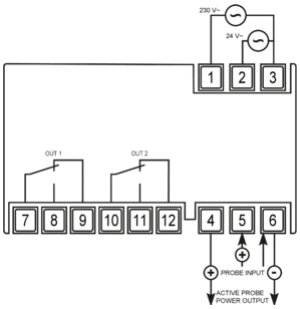

Probe input:
- 0÷1 V
- 4÷20 mA
- 0÷20 mA

Active probe output power:
- 9 Vdc max 30 mA

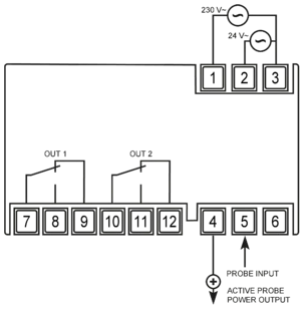

Probe input:
- 0÷1 V
- 4÷20 mA
- 0÷20 mA

Active probe output power:
- 9 Vdc max 30 mA

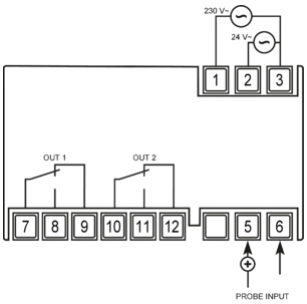

Probe input:
- 0÷1 V
- 4÷20 mA
- 0÷20 mA

Product variants

PR-1P7A

VM648300

Digital panel controller (72×72) connectable with 24/230 Vac linear sensors, with 1 relay

Vemer S.p.A. declines all responsibility for the use of the products for purposes other than those for which they are intended, as indicated in the technical documentation. Vemer S.p.A. reserves the right to make, without prior notice, such changes as may, in its sole discretion, improve the technical and functional characteristics of the products and the related production logic. The technical characteristics and images of the products indicated are given for information only and are not binding in any way, since they may be modified without prior notice.

Accessories compatible with the product

SPK-10

VN871000

Pressure probe providing a current signal proportional to measured pressure, 1.5 m length, working range -0.5 ÷ 7 bar

SPK-30

VN872800

Pressure probe providing a current signal proportional to measured pressure, 1.5 m length, working range 0 ÷ 30 bar

EVCOP

VJ44820000

Protective cover for panel-mounted devices, 72×72 mm.

EVAD

VJ44580000

Adapter for panel-mounted devices, from 72 × 72 mm to 96 × 96 mm.

Reference standards

Compliance with Community Directives:

• 2014/35/UE (LVD) • 2014/30/UE (EMCD) • 2011/65/UE e 2015/863/UE (ROHS)

is declared with reference to the following Standards:

• EN 60730-1 • EN IEC 63000

Vemer S.p.A. declines all responsibility for the use of the products for purposes other than those for which they are intended, as indicated in the technical documentation. Vemer S.p.A. reserves the right to make, without prior notice, such changes as may, in its sole discretion, improve the technical and functional characteristics of the products and the related production logic. The technical characteristics and images of the products indicated are given for information only and are not binding in any way, since they may be modified without prior notice.