TM6 230/12

VE260600

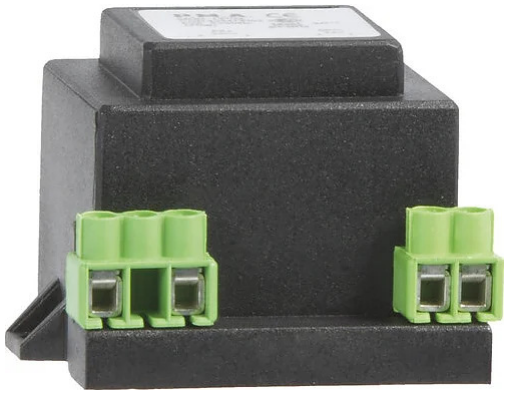

Series of transformers with terminals for powering low-consumption devices.

General features

- Primary connection terminals
- Secondary connection terminals
- Holes for fixing screws

Technical specifications

Power supply	
Power supply	230 Vac
Frequency	50 / 60 Hz
Functional characteristics	
Primary voltage	230 Vac
Secondary voltage	12 Vac
Output power	6 VA
Overall dimensions	
Height (A)	40 mm
Width (B)	58 mm
Depth (C)	47.5 mm

Vemer S.p.A. declines all responsibility for the use of the products for purposes other than those for which they are intended, as indicated in the technical documentation. Vemer S.p.A. reserves the right to make, without prior notice, such changes as may, in its sole discretion, improve the technical and functional characteristics of the products and the related production logic. The technical characteristics and images of the products indicated are given for information only and are not binding in any way, since they may be modified without prior notice.

Revision date: 2026-02-02

TM6 230/12

VE260600

Dimensions

Top View

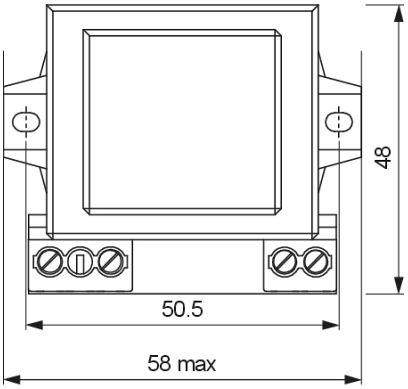

Side View

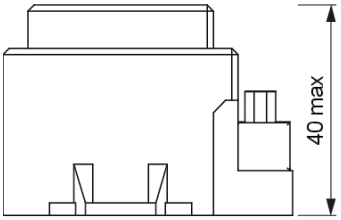

Wiring diagram

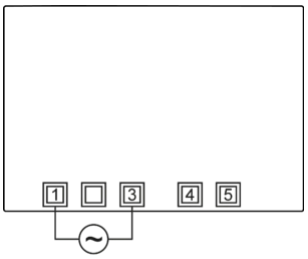

+ (G): power supply
M: power supply/output reference
OUT H: humidity output

Product variants

TM6 230/24

VE261400

Transformer with 230 Vac terminals, 6 VA power and 24 V secondary voltage

Reference standards

Compliance with Community Directives:

• 2014/35/UE (LVD) • 2011/65/UE e 2015/863/UE (ROHS)

is declared with reference to the following Standards:

• EN IEC 61558-1 • EN IEC 63000

Vemer S.p.A. declines all responsibility for the use of the products for purposes other than those for which they are intended, as indicated in the technical documentation. Vemer S.p.A. reserves the right to make, without prior notice, such changes as may, in its sole discretion, improve the technical and functional characteristics of the products and the related production logic. The technical characteristics and images of the products indicated are given for information only and are not binding in any way, since they may be modified without prior notice.