MT 32

VJ71390000



General features

- For fixing and grounding galvanized steel or PVC pipes
- Made of stamped and electrolytically galvanized steel
- High corrosion resistance

Technical specifications

Overall dimensions	
Height (A)	44 mm
Width (B)	64 mm
Depth (C)	15 mm
Quote	
Pipe Ø (in mm)	32 mm
Pipe Ø (in inches)	1 "

Dimensions

Front View

Side View

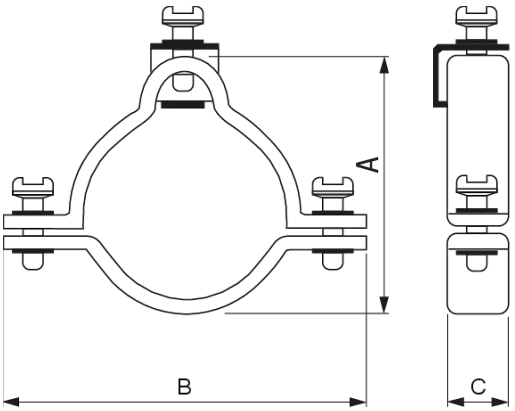

Vemer S.p.A. declines all responsibility for the use of the products for purposes other than those for which they are intended, as indicated in the technical documentation. Vemer S.p.A. reserves the right to make, without prior notice, such changes as may, in its sole discretion, improve the technical and functional characteristics of the products and the related production logic. The technical characteristics and images of the products indicated are given for information only and are not binding in any way, since they may be modified without prior notice.

Revision date: 2026-02-02

MT 32

VJ71390000

Product variants

MT 16
VJ71050000
Grounding collar for 16 mm diameter pipes

MT 20
VJ71130000
Grounding collar for 20 mm diameter pipes

MT 26
VJ71210000
Grounding collar for 26 mm diameter pipes

MT 38
VJ71470000
Grounding collar for 38 mm diameter pipes

MT 48
VJ71540000
Grounding collar for 48 mm diameter pipes

MT 60
VJ71620000
Grounding collar for 60 mm diameter pipes

Vemer S.p.A. declines all responsibility for the use of the products for purposes other than those for which they are intended, as indicated in the technical documentation. Vemer S.p.A. reserves the right to make, without prior notice, such changes as may, in its sole discretion, improve the technical and functional characteristics of the products and the related production logic. The technical characteristics and images of the products indicated are given for information only and are not binding in any way, since they may be modified without prior notice.

Revision date: 2026-02-02