ThermoPro Wi-Fi

VE798100



Wi-Fi smart thermostat for thermostat valve installation, with weekly programming and battery power supply. Acts on the valve, causing it to open (even partially) depending on the difference between set and detected temperature. Thanks to the Wi-Fi connection, the device can be remotely controlled in all its functions, using the free app available for iOS and Android. Programming, switching on the system, changing the operating settings and creating new programmes are operations that can be all performed easily and from anywhere thanks to the integrated Wi-Fi module that connects the device to the internet through the home router.

General features

- Integrated Wi-Fi module compatible with 802.11 b/g/n standards
- Elegant backlit display and touch keys
- Application for iOS and Android systems
- Full programming and management via application
- Weekly programming with modulation of valve opening depending on setpoint, measured temperature and room features
- Automatic summer/sunshine time change and automatic synchronisation of date and time when connected to Wi-Fi network
- Keypad lock function with password to prevent modifications by unauthorised people
- Holiday function: allows you to select the desired temperature, or set the valve to close, for an adjustable period of time
- Window open function: automatically closes the heating valve to save energy if a sharp temperature drop is detected due to an open window (sensitivity and closing time adjustable)
- PLUS keyboard lock function: allows control of the device via the app only (keyboard input is ignored)
- Safety functions:
  - Antifreeze temperature to prevent freezing of the system when the temperature drops below 8 °C
  - Anti-scale protection to prevent radiator valves from calcifying by running a valve opening and closing cycle once a week (Friday at 11:00 am)
  - Low battery warning on display and via e-mail
- Classification according to point 6 of European Commission Communication 2014/C 207/02: class IV
- Adapters supplied to install the device on the main thermostatic valves

Technical specifications

Power supply	
Power supply	2 batteries (AA) 1.5 V Alkaline NOT rechargeable
Temperature settings	
Temperature setting range	8 ÷ 28 °C
Temperature setting range Antifreeze (Off)	8 °C
Parameter settings	
Type of adjustment	Valve opening modulation

Vemer S.p.A. declines all responsibility for the use of the products for purposes other than those for which they are intended, as indicated in the technical documentation. Vemer S.p.A. reserves the right to make, without prior notice, such changes as may, in its sole discretion, improve the technical and functional characteristics of the products and the related production logic. The technical characteristics and images of the products indicated are given for information only and are not binding in any way, since they may be modified without prior notice.

Revision date: 2026-02-02

Parameter settings	
Differential/Hysteresis	0.3 °C (fixed differential)
Modes of operation	Winter
Programming	Weekly
Programming resolution	10 minutes
Measure	
Temperature display resolution	0.5 °C
Temperature measurement accuracy	1 °C
Functions	
Keypad lock function	✓
Manageable by application	✓
Operating conditions	
Operating temperature range	0 ÷ 50 °C
Relative humidity	20% ÷ 90% non-condensing RH
Storage temperature range	-20 ÷ 70 °C
Approvals and certifications	
Classification according to point 6 of Communication 2014/C 207/02 of the European Commission:	Class IV
Viewing	
Display	LED
Terminations	
Maximum cable cross-section	1.5 mm²
Mechanical features	
Protection degree	IP20
Physical features	
Color	White
Device command	Touch screen
Backlighting	✓
Overall dimensions	
Height (A)	68 mm
Width (B)	62 mm
Depth (C)	82 mm

Vemer S.p.A. declines all responsibility for the use of the products for purposes other than those for which they are intended, as indicated in the technical documentation. Vemer S.p.A. reserves the right to make, without prior notice, such changes as may, in its sole discretion, improve the technical and functional characteristics of the products and the related production logic. The technical characteristics and images of the products indicated are given for information only and are not binding in any way, since they may be modified without prior notice.

Dimensions

Front View

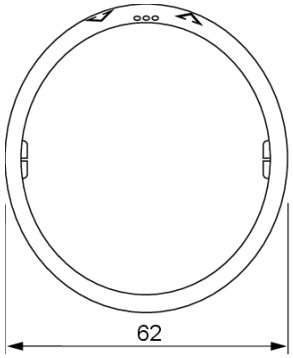

Side View

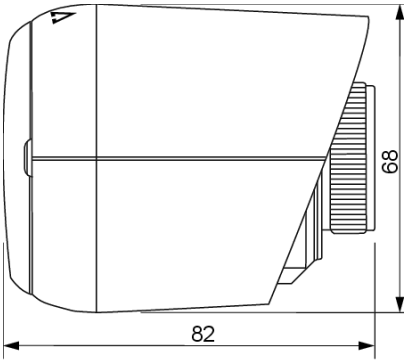

Wiring diagram

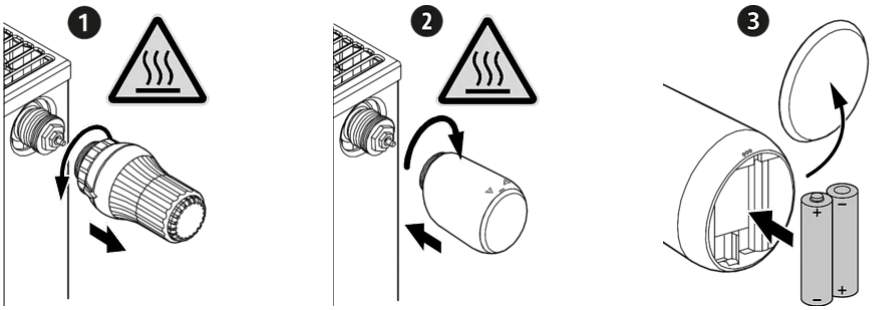

Vemer S.p.A. declines all responsibility for the use of the products for purposes other than those for which they are intended, as indicated in the technical documentation. Vemer S.p.A. reserves the right to make, without prior notice, such changes as may, in its sole discretion, improve the technical and functional characteristics of the products and the related production logic. The technical characteristics and images of the products indicated are given for information only and are not binding in any way, since they may be modified without prior notice.

ThermoPro Wi-Fi

VE798100

Remote control

Fully manageable via smartphone and tablet app

ThermoPro Wi-Fi





ThermoPro Wi-Fi is the smart application designed to manage smart radiator thermostats "Thermo Pro Wi-Fi", also remotely. Thanks to the ThermoPro Wi-Fi app and the Wi-Fi connection integrated in the device, users can connect the smart thermostat to the home router and control the temperature of each radiator from anywhere and at any time, always ensuring maximum comfort and energy saving.
The intuitive interface makes it easy to program devices, schedule temperatures, set special functions and enables multi-zone control by creating customized environments for each room equipped with a radiator.

App features

• **Program management**
Allows creating, editing, and renaming programs directly on the smartphone.

• **Holiday**
Allows setting vacation days during which the system remains off.

• **Open window**
Allows automatically closing the valve to save energy if a sudden temperature drop is detected due to an open window, based on preset values.

• **Keypad lock function Plus**
Allows controlling the device exclusively via app, ignoring changes made via the keypad.

• **Room Management**
In each home, office or building, it allows the identification of various rooms (Living Room, Bathroom, Room,...).

Compatible cover frames

Braukmann
Braukmann (size M30x1.5)

Danfoss
Danfoss RA*

Danfoss
Danfoss RAV*

Danfoss
Danfoss RAVL*

Heimeier
Heimeier

Honeywell
Honeywell

Junkers
Junkers Landys+Gyr

MNG
MNG

For information on the possibility of adaptation with other valves, contact the technical service department
* via accessory included in the package

Reference standards

Compliance with Community Directives:

• 2014/53/UE (RED) • 2011/65/UE e 2015/863/UE (ROHS)
is declared with reference to the following Standards:

• EN 60730-1 • EN IEC 62311 • ETSI EN 300 328 • ETSI EN 301 489-1 • ETSI EN 301 489-17 • EN IEC 63000

Vemer S.p.A. declines all responsibility for the use of the products for purposes other than those for which they are intended, as indicated in the technical documentation. Vemer S.p.A. reserves the right to make, without prior notice, such changes as may, in its sole discretion, improve the technical and functional characteristics of the products and the related production logic. The technical characteristics and images of the products indicated are given for information only and are not binding in any way, since they may be modified without prior notice.

Revision date: 2026-02-02